DWG NO.	DRAWING TITLE	DATE	REV.	DATE	REV.	DATE	REV.	DATE	REV.	DATE	REV.	DATE	REV.
MPS-E-200-00	COVER SHEET	08/30/23	A	09/06/23	B	10/06/23	C	10/20/23	D	01/15/24	E	06/28/24	F
MPS-E-201-00	ONE-LINE DIAGRAM	08/30/23	A	10/6/2023	B	10/20/23	C	01/15/24	D				
MPS-E-210-01	COLLECTOR SUBSTATION GENERAL ARRANGEMENT	08/30/23	A	10/20/23	B	01/15/24	C	06/28/24	D				
MPS-E-210-02	COLLECTOR SUBSTATION SECTION A-A & B-B	08/30/23	A	10/20/23	B	01/15/24	C						
MPS-E-210-03	COLLECTOR SUBSTATION SECTION C-C	08/30/23	A	10/20/23	B	01/15/24	C						
MPS-E-210-04	COLLECTOR SUBSTATION CONTROL HOUSE ELEVATION	05/31/24	A										
MPS-E-210-10	POI SWITCHYARD GENERAL ARRANGEMENT	08/30/23	A	09/06/23	B	10/20/23	C	01/15/24	D	06/28/24	E		
MPS-E-210-11	POI SWITCHYARD SECTION A-A & B-B	09/06/23	A	10/06/23	B	10/20/23	C	01/15/24	D				
MPS-E-210-12	POI SWITCHYARD SECTION C-C	09/06/23	A	10/06/23	B	10/20/23	C	01/15/24	D				
MPS-E-210-13	POI SWITCHYARD SECTION D-D & E-E	09/06/23	A	10/06/23	B	10/20/23	C	01/15/24	D				
MPS-E-210-14	POI SWITCHYARD SECTION F-F,G-G,H-H,J-J	09/06/23	A	10/06/23	B	10/20/23	C	01/15/24	D	06/28/24	E		
MPS-E-210-15	PERIMETER FENCE AND WALL ERECTION DETAILS	08/30/23	A	10/20/23	B	01/15/24	C						
MPS-E-210-16	COLLECTOR PERIMETER WALL/FENCE DETAIL	05/31/24	A										
MPS-E-210-20	COLLECTOR SUBSTATION CONTROL HOUSE LAYOUT	08/30/23	A	10/20/23	B	01/15/24	C						
MPS-E-210-21	345KV COLLECTOR SUBSTATION LIGHTING PLAN	08/30/23	A	10/20/23	B	01/15/24	C	06/28/24	D				
MPS-E-210-22	345KV POI SWITCHYARD LIGHTING PLAN	08/30/23	A	10/20/23	B	01/15/24	C	06/28/24	D				

MILL POINT SOLAR I PROJECT

PREPARED FOR: CONNECTGEN MONTGOMERY COUNTY LLC
PREPARED BY: TRC ENGINEERS, INC.
ISSUE DATE: 05/31/24
ISSUE STATUS: 94-C

PROJECT DATA

LOCATION: MONTGOMERY COUNTY, NY
PROJECTION: STATE PLANE NAD 83 (NY82-EF)
POWER GENERATED: 250 MWac

SITE MAP

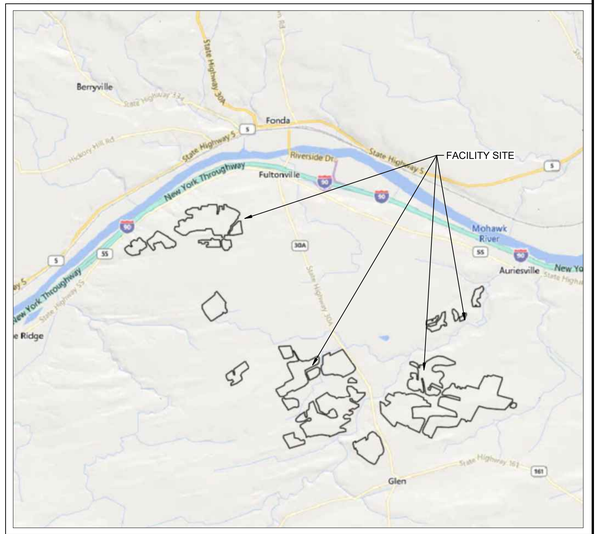

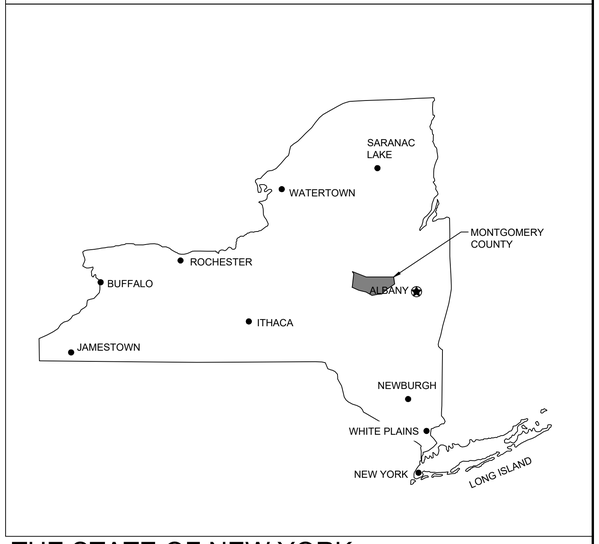

THE STATE OF NEW YORK

PRELIMINARY
NOT FOR CONSTRUCTION

NOTE:
1. DRAWING PREPARED UNDER JEREMIAH T. BRIDGWOOD - LICENSED PROFESSIONAL ENGINEER IN THE STATE OF NEW YORK; LICENSE NO. 107034, EXPIRATION DATE 11/30/2025, TRC ENGINEERS, INC, LLC, CERTIFICATE OF AUTHORIZATION NO. 001817, 1407 BROADWAY, SUITE 3301, NEW YORK, NEW YORK 10018. DRAWING PREPARED FOR CONNECTGEN, MILL POINT SOLAR PROJECT LOCATED IN MONTGOMERY COUNTY, NY.
2. UNDER NEW YORK STATE EDUCATION LAW ARTICLE 145 (ENGINEERING), SECTION 7209 (2), IT IS A VIOLATION OF THE LAW FOR ANY PERSON, UNLESS ACTING UNDER THE DIRECTION OF A LICENSED PROFESSIONAL ENGINEER, TO ALTER THIS DOCUMENT.

TRC 10 MAXWELL DRIVE, SUITE 200
CLIFTON PARK, NY 12065

PROJECT NO: 443269

REV	DESCRIPTION	DATE	DES	CHK	APP
F	ISSUE FOR 94-C DEFICIENCY SUPPLEMENT	06/28/24	TB	CT	
E	RE-ISSUE FOR 94-C	01/15/24	TB	CT	
D	ISSUED FOR 94-C	10/20/23	TB	CT	
C	RE-ISSUED FOR REVIEW	10/05/23	TB	CT	

STATE OF NEW YORK · JEREMIAH T. BRIDGWOOD · 107034 · LICENSED PROFESSIONAL ENGINEER

TB DESIGNED
EL DRAWN
CT CHECKED
APPROVED
REVIEW 1
REVIEW 2

01/15/24 DATE
N.T.S. SCALE

MILL POINT SOLAR I PROJECT
CONNECTGEN, MONTGOMERY COUNTY, LLC
COVER SHEET

TRC MPS-E-200-00 REV. F

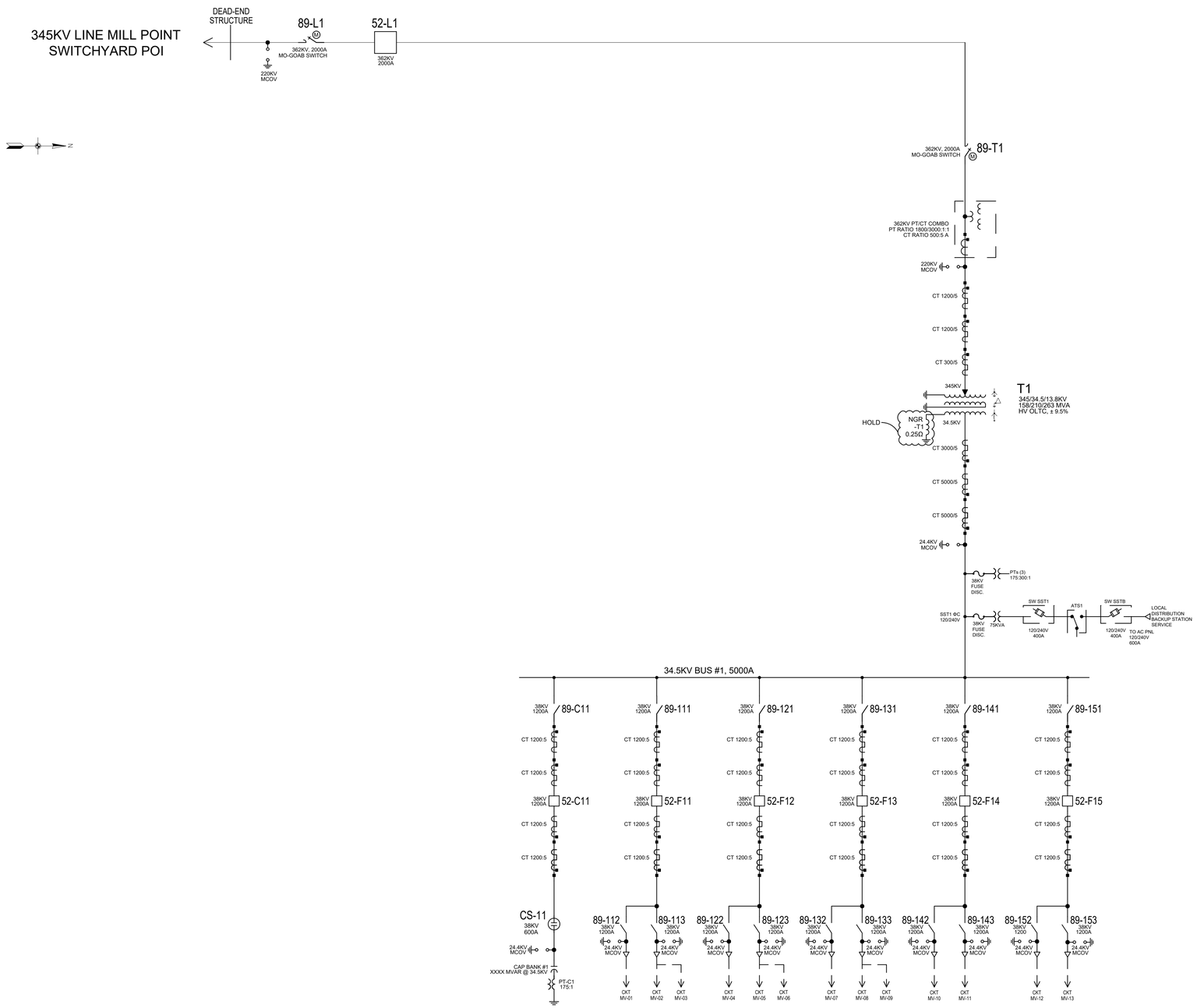

LEGEND:

SST -	STATION SERVICE TRANSFORMER
LTC -	LOAD TAP CHANGER
▽	TRANSITION TO UNDERGROUND CABLE
— —	UNDERGROUND CABLE
	SURGE ARRESTER
	MOTOR OPERATED GROUP AIR BREAK SWITCH
	POTENTIAL TRANSFORMER/VOLTAGE TRANSFORMER
	CT/PT COMBO INSTRUMENT TRANSFORMER
	CAPACITOR SWITCHER
	CIRCUIT BREAKER
	LOW VOLTAGE FUSED DISCONNECT SWITCH
	LOW VOLTAGE AUTOMATIC TRANSFER SWITCH
	FUSED DISCONNECT SWITCH
	CAPACITOR BANK
	THREE WINDING MAIN POWER TRANSFORMER (WYE-WYE WITH BURIED DELTA TERTIARY)

PRELIMINARY
NOT FOR CONSTRUCTION

NOTE:

1. DRAWING PREPARED UNDER JEREMIAH T. BRIDGWOOD - LICENSED PROFESSIONAL ENGINEER IN THE STATE OF NEW YORK; LICENSE NO. 107034, EXPIRATION DATE 11/30/2025, TRC ENGINEERS, INC, LLC, CERTIFICATE OF AUTHORIZATION NO. 001817, 1407 BROADWAY, SUITE 3301, NEW YORK, NEW YORK 10018. DRAWING PREPARED FOR CONNECTGEN, MILL POINT SOLAR PROJECT LOCATED IN MONTGOMERY COUNTY, NY.
2. UNDER NEW YORK STATE EDUCATION LAW ARTICLE 145 (ENGINEERING), SECTION 7209 (2), IT IS A VIOLATION OF THE LAW FOR ANY PERSON, UNLESS ACTING UNDER THE DIRECTION OF A LICENSED PROFESSIONAL ENGINEER, TO ALTER THIS DOCUMENT.

TRC
10 MAXWELL DRIVE, SUITE 200
CLIFTON PARK, NY 12065

PROJECT NO: 443269

REV	DESCRIPTION	DATE	DES	CHK	APP
D	RE-ISSUE FOR 94-C	01/15/24	TB	CT	
C	ISSUED FOR 94-C	10/20/23	TB	CT	
B	RE-ISSUED FOR REVIEW	10/05/23	TB	CT	
A	ISSUE FOR REVIEW	08/30/23	TB	CT	.

STATE OF NEW YORK · JEREMIAH T. BRIDGWOOD · 107034 · LICENSED PROFESSIONAL ENGINEER
Digitally signed by Jeremiah T Bridgwood
Date: 2024.01.19 15:11:20-05'00'

TB DESIGNED
EL DRAWN
CT CHECKED
APPROVED
REVIEW 1
REVIEW 2
01/15/24 DATE
N.T.S. SCALE

MILL POINT SOLAR 34.5/345KV COLLECTOR SUBSTATION ONE-LINE DIAGRAM

(ELECTRICAL)

TRC

MPS-E-201-00

REV. D

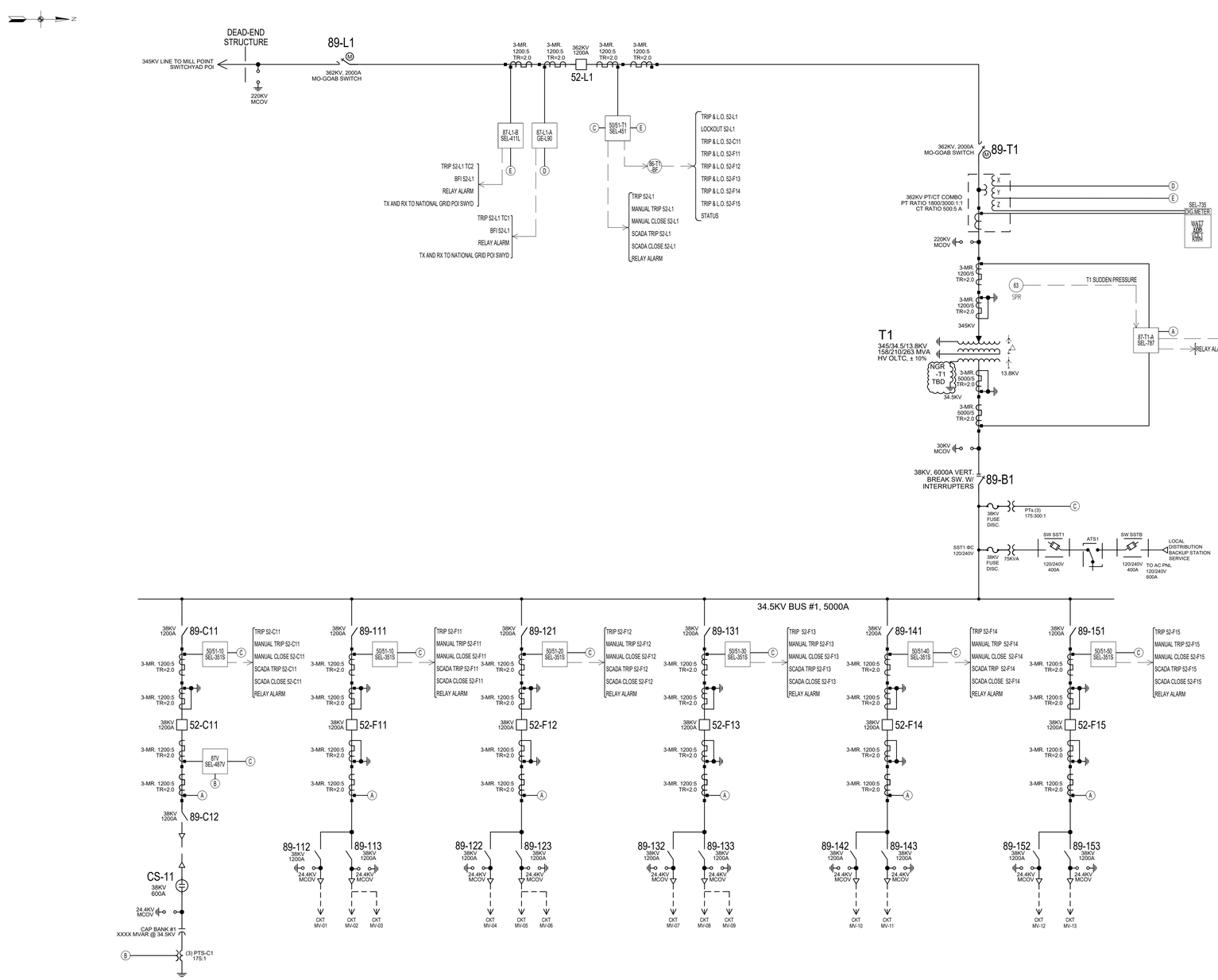

LEGEND:

SST - STATION SERVICE TRANSFORMER

LTC - LOAD TAP CHANGER

TRANSITION TO UNDERGROUND CABLE

UNDERGROUND CABLE

SURGE ARRESTER

MOTOR OPERATED GROUP AIR BREAK SWITCH

POTENTIAL TRANSFORMER/VOLTAGE TRANSFORMER

CT/PT COMBO INSTRUMENT TRANSFORMER

CAPACITOR SWITCHER

CIRCUIT BREAKER

LOW VOLTAGE FUSED DISCONNECT SWITCH

LOW VOLTAGE AUTOMATIC TRANSFER SWITCH

FUSED DISCONNECT SWITCH

CAPACITOR BANK

THREE WINDING MAIN POWER TRANSFORMER (WYE-WYE WITH BURIED DELTA TERTIARY)

ANSI DEVICE NUMBERS	
50	INSTANTANEOUS OVERCURRENT RELAY
51	AC TIME OVERCURRENT RELAY
63	TRANSFORMER SUDDEN PRESSURE
86	LOCK-OUT RELAY
87	DIFFERENTIAL PROTECTIVE RELAY
87T	TRANSFORMER DIFFERENTIAL
87L	LINE DIFFERENTIAL

Dig Safely. New York. Call 811 before you dig

PRELIMINARY
NOT FOR CONSTRUCTION

NOTE:

1. DRAWING PREPARED UNDER JEREMIAH T. BRIDGWOOD - LICENSED PROFESSIONAL ENGINEER IN THE STATE OF NEW YORK; LICENSE NO. 107034, EXPIRATION DATE 11/30/2025, TRC ENGINEERS, INC, LLC, CERTIFICATE OF AUTHORIZATION NO. 001817, 1407 BROADWAY, SUITE 3301, NEW YORK, NEW YORK 10018. DRAWING PREPARED FOR CONNECTGEN, MILL POINT SOLAR PROJECT LOCATED IN MONTGOMERY COUNTY, NY.
2. UNDER NEW YORK STATE EDUCATION LAW ARTICLE 145 (ENGINEERING), SECTION 7209 (2), IT IS A VIOLATION OF THE LAW FOR ANY PERSON, UNLESS ACTING UNDER THE DIRECTION OF A LICENSED PROFESSIONAL ENGINEER, TO ALTER THIS DOCUMENT.

TRC
10 MAXWELL DRIVE, SUITE 200
CLIFTON PARK, NY 12065

PROJECT NO: 443269

REV	DESCRIPTION	DATE	DES	CHK	APP
D	RE-ISSUE FOR 94-C	01/15/24	TB	CT	
C	ISSUED FOR 94-C	10/20/23	TB	CT	
B	RE-ISSUE FOR REVIEW	10/06/23	TB	CT	
A	ISSUE FOR REVIEW	08/30/23	TB	CT	.

STATE OF NEW YORK · JEREMIAH T. BRIDGWOOD · 107034 · LICENSED PROFESSIONAL ENGINEER

Digitally signed by Jeremiah T Bridgwood
Date: 2024.01.19 15:11:20-05'00'

TB DESIGNED
EL DRAWN
CT CHECKED
APPROVED
REVIEW 1
REVIEW 2

01/15/24 DATE
N.T.S. SCALE

MILL POINT SOLAR 34.5/345KV COLLECTOR SUBSTATION ONE-LINE METER AND RELAY DIAGRAM
(ELECTRICAL)

TRC MPS-E-201-01 REV. D

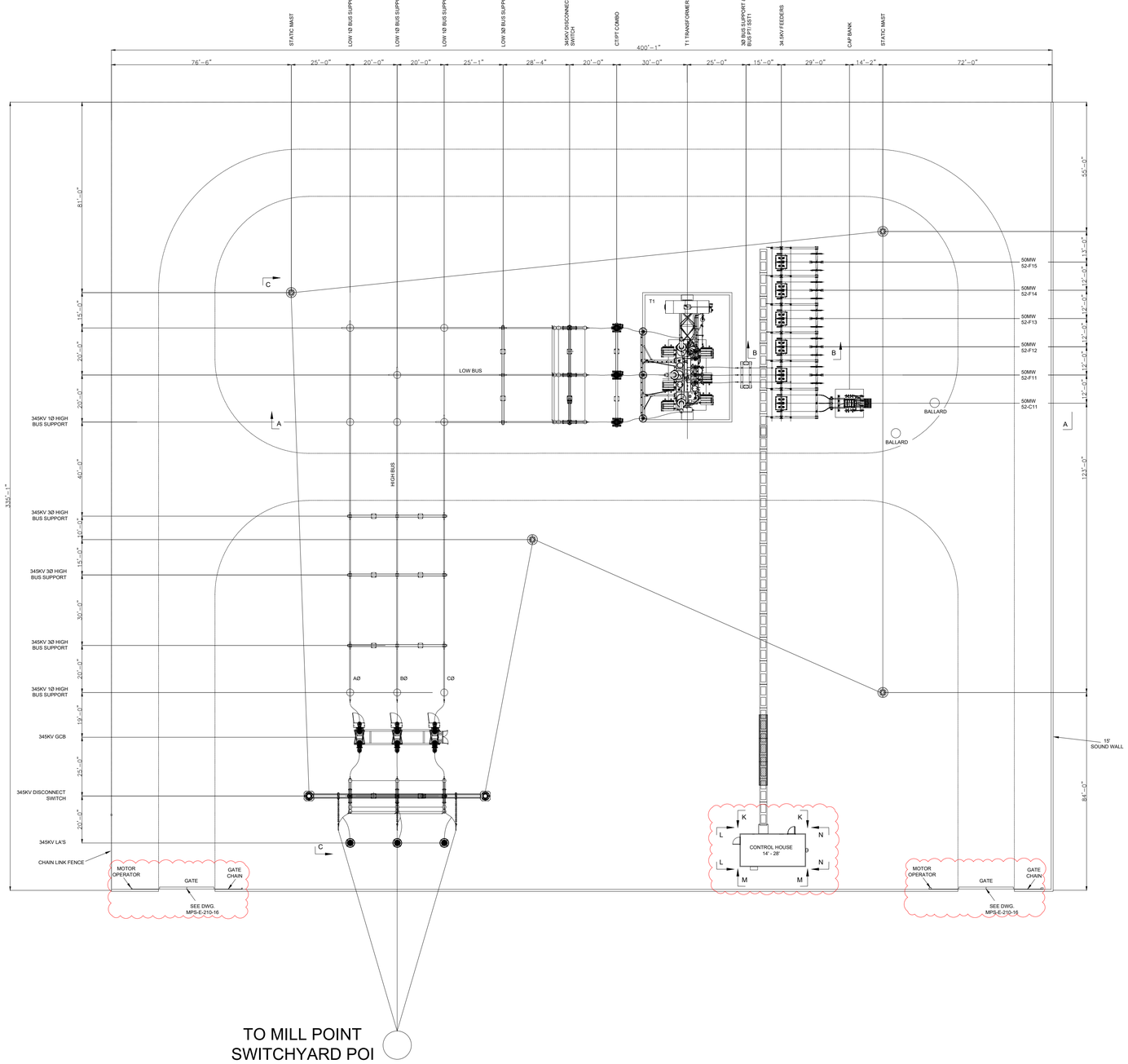

20 0 20 40 FT

SCALE: 1"=20'

DESIGN CRITERIA:

345kV CLEARANCE: (1300 kV BIL)

LIVE PARTS: MIN Ø-G = 104"
MIN Ø-Ø = 119"
BUS MIN LOW = 324"
BUS MIN HIGH = XXX"

34.5 kV CLEARANCE: (200 kV BIL)

LIVE PARTS: MIN Ø-G = 13"
MIN Ø-Ø = 18"

TO GRADE: MIN 10'-0" (BUS)
MIN 22'-0" (DRIVEWAY)

LEGEND:

SOUND WALL

x FENCE

NOTE:

1. DRAWING PREPARED UNDER JEREMIAH T. BRIDGWOOD - LICENSED PROFESSIONAL ENGINEER IN THE STATE OF NEW YORK; LICENSE NO. 107034, EXPIRATION DATE 11/30/2025, TRC ENGINEERS, INC, LLC, CERTIFICATE OF AUTHORIZATION NO. 001817, 1407 BROADWAY, SUITE 3301, NEW YORK, NEW YORK 10018. DRAWING PREPARED FOR CONNECTGEN, MILL POINT SOLAR PROJECT LOCATED IN MONTGOMERY COUNTY, NY.
2. UNDER NEW YORK STATE EDUCATION LAW ARTICLE 145 (ENGINEERING), SECTION 7209 (2), IT IS A VIOLATION OF THE LAW FOR ANY PERSON, UNLESS ACTING UNDER THE DIRECTION OF A LICENSED PROFESSIONAL ENGINEER, TO ALTER THIS DOCUMENT.

Dig Safely. New York Call 811 before you dig

PRELIMINARY
NOT FOR CONSTRUCTION

TRC 10 MAXWELL DRIVE, SUITE 200
CLIFTON PARK, NY 12065

PROJECT NO: 443269

REV	DESCRIPTION	DATE	DES	CHK	APP
D	ISSUE FOR 94-C DEFICIENCY SUPPLEMENT	06/28/24	TB	CT	
C	RE-ISSUE FOR 94-C	01/15/24	TB	CT	
B	ISSUE FOR 94-C	10/20/23	TB	CT	
A	ISSUE FOR REVIEW	08/30/23	TB	CT	

STATE OF NEW YORK
JEREMIAH T. BRIDGWOOD
107034
LICENSED PROFESSIONAL ENGINEER

TB DESIGNED
EL DRAWN
CT CHECKED
APPROVED
REVIEW 1
REVIEW 2

MILL POINT SOLAR 345/34.5KV COLLECTOR SUBSTATION GENERAL ARRANGEMENT

(PHYSICAL)

MONTGOMERY CO. NEW YORK

01/15/24 DATE
1" - 20' SCALE

TRC

MPS-E-210-01

REV. D

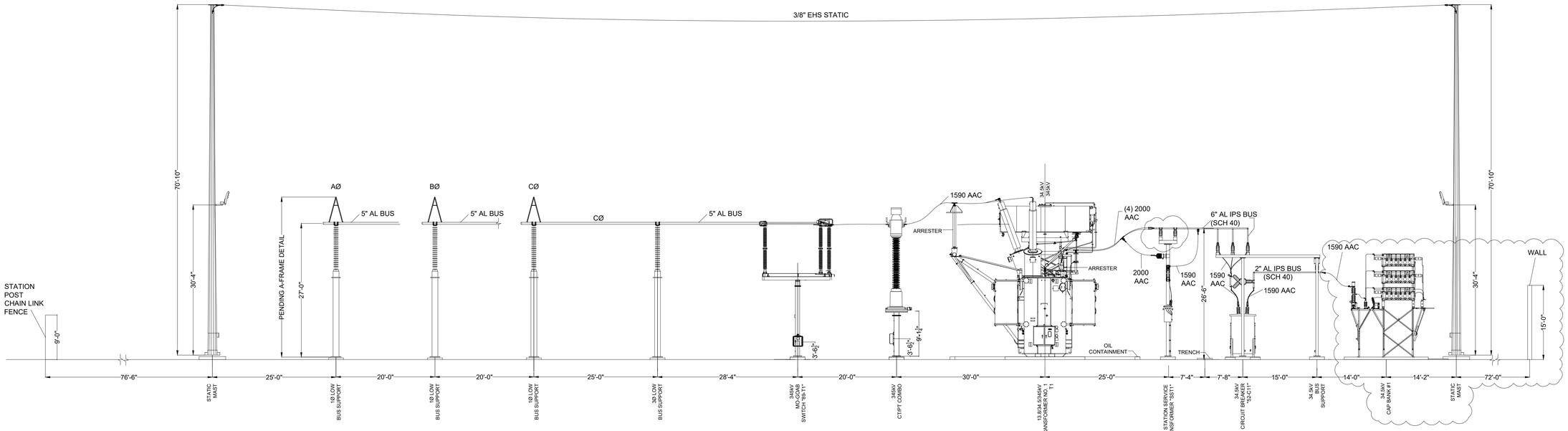

SECTION A-A
SCALE: 1/128"=1'-0"

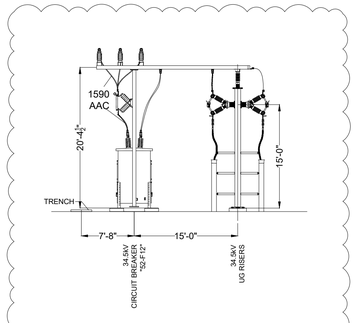

SECTION B-B
SCALE: 1/128"=1'-0"

DESIGN CRITERIA:

345kV CLEARANCE: (1300 kV BIL)

LIVE PARTS: MIN Ø-G = 104"
MIN Ø-Ø = 119"

34.5 kV CLEARANCE: (200 kV BIL)

LIVE PARTS: MIN Ø-G = 13"
MIN Ø-Ø = 18"

TO GRADE: 10'-0" (BUS)
22'-0" (DRIVEWAY)

NOTE:

1. DRAWING PREPARED UNDER JEREMIAH T. BRIDGWOOD - LICENSED PROFESSIONAL ENGINEER IN THE STATE OF NEW YORK; LICENSE NO. 107034, EXPIRATION DATE 11/30/2025, TRC ENGINEERS, INC, LLC, CERTIFICATE OF AUTHORIZATION NO. 001817, 1407 BROADWAY, SUITE 3301, NEW YORK, NEW YORK 10018. DRAWING PREPARED FOR CONNECTGEN, MILL POINT SOLAR PROJECT LOCATED IN MONTGOMERY COUNTY, NY.
2. UNDER NEW YORK STATE EDUCATION LAW ARTICLE 145 (ENGINEERING), SECTION 7209 (2), IT IS A VIOLATION OF THE LAW FOR ANY PERSON, UNLESS ACTING UNDER THE DIRECTION OF A LICENSED PROFESSIONAL ENGINEER, TO ALTER THIS DOCUMENT.

Dig Safely. New York
Call811
before you dig

PRELIMINARY
NOT FOR CONSTRUCTION

TRC
10 MAXWELL DRIVE, SUITE 200
CLIFTON PARK, NY 12065

PROJECT NO: 443269

REV	DESCRIPTION	DATE	DES	CHK	APP
C	RE-ISSUE FOR 94-C	01/15/24	TB	CT	JTB
B	ISSUE FOR 94-C	10/20/23	TB	CT	.
A	ISSUE FOR REVIEW	08/30/23	TB	CT	.

STATE OF NEW YORK
JEREMIAH T. BRIDGWOOD
107034
LICENSED PROFESSIONAL ENGINEER

TB DESIGNED
EL DRAWN
CT CHECKED
JTB APPROVED
REVIEW 1
REVIEW 2

MILL POINT SOLAR 34.5/345KV COLLECTOR SUBSTATION SECTION A-A, B-B

(PHYSICAL)

01/15/24 DATE
1/128" = 1'-0" SCALE

TRC

MPS-E-210-02

REV. C

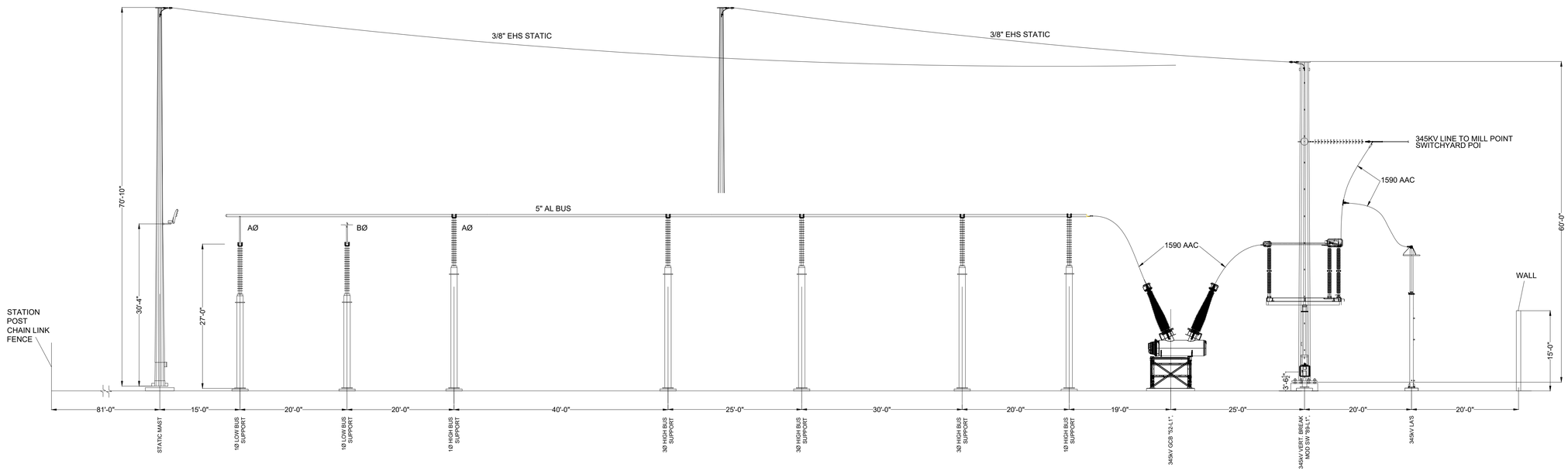

SECTION C-C

SCALE: 1/128"=1'-0"

DESIGN CRITERIA:

345kV CLEARANCE: (1300 kV BIL)

LIVE PARTS: MIN Ø-G = 104"
MIN Ø-Ø = 119"

34.5 kV CLEARANCE: (200 kV BIL)

LIVE PARTS: MIN Ø-G = 13"
MIN Ø-Ø = 18"

TO GRADE: 10'-0" (BUS)
22'-0" (DRIVEWAY)

NOTE:

1. DRAWING PREPARED UNDER JEREMIAH T. BRIDGWOOD - LICENSED PROFESSIONAL ENGINEER IN THE STATE OF NEW YORK; LICENSE NO. 107034, EXPIRATION DATE 11/30/2025, TRC ENGINEERS, INC, LLC, CERTIFICATE OF AUTHORIZATION NO. 001817, 1407 BROADWAY, SUITE 3301, NEW YORK, NEW YORK 10018. DRAWING PREPARED FOR CONNECTGEN, MILL POINT SOLAR PROJECT LOCATED IN MONTGOMERY COUNTY, NY.
2. UNDER NEW YORK STATE EDUCATION LAW ARTICLE 145 (ENGINEERING), SECTION 7209 (2), IT IS A VIOLATION OF THE LAW FOR ANY PERSON, UNLESS ACTING UNDER THE DIRECTION OF A LICENSED PROFESSIONAL ENGINEER, TO ALTER THIS DOCUMENT.

Dig Safely. New York Call811 before you dig

PRELIMINARY
NOT FOR CONSTRUCTION

TRC
10 MAXWELL DRIVE, SUITE 200
CLIFTON PARK, NY 12065

PROJECT NO: 443269

REV	DESCRIPTION	DATE	DES	CHK	APP
					JTB
C	RE-ISSUE FOR 94-C	01/15/24	TB	CT	.
B	ISSUE FOR 94-C	10/20/23	TB	CT	.
A	ISSUE FOR REVIEW	08/30/23	TB	CT	.

STATE OF NEW YORK
JEREMIAH T. BRIDGWOOD
107034
LICENSED PROFESSIONAL ENGINEER

TB DESIGNED
EL DRAWN
CT CHECKED
JTB APPROVED
REVIEW 1
REVIEW 2

MILL POINT SOLAR 34.5/345KV COLLECTOR SUBSTATION SECTION C-C

(PHYSICAL)

01/15/24 DATE
1/128" = 1'-0" SCALE

TRC

MPS-E-210-03

REV. C

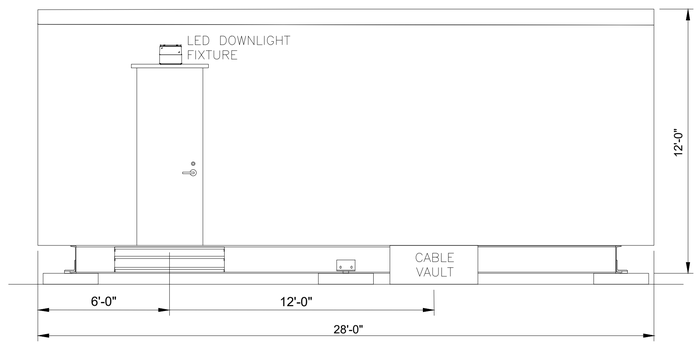

SECTION K-K

SCALE: NTS

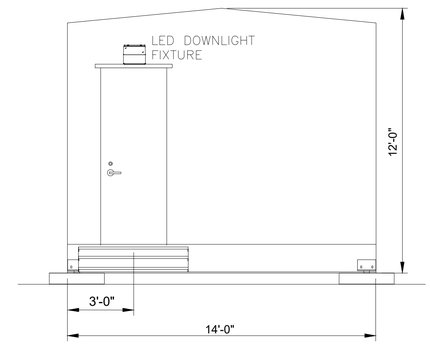

SECTION L-L

SCALE: NTS

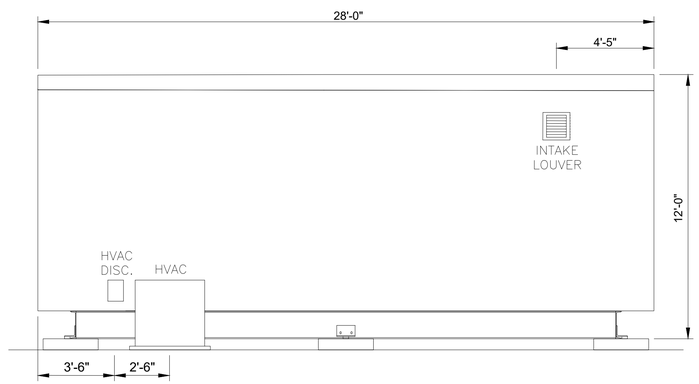

SECTION M-M

SCALE: NTS

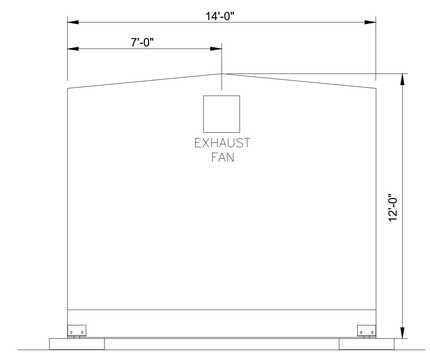

SECTION N-N

SCALE: NTS

NOTE:

1. THE EQUIPMENT AND LAYOUT SHOWN IS FOR CONCEPTUAL USE ONLY.
2. ELECTRICAL EQUIPMENT WILL UTILIZE GALVANIZED STEEL MATERIAL AND EQUIPMENT COLOR WILL BE NATURAL GALVANIZED STEEL, WHITE OR ANSI GRAY. FINAL MATERIAL TYPE AND FINISH COLOR DETAILS WILL BE UPDATED DURING DETAILED DESIGN.

DESIGN CRITERIA:

345kV CLEARANCE: (1300 kV BIL)

LIVE PARTS: MIN Ø-G = 104"
MIN Ø-Ø = 119"

TO GRADE: 10'-0" (BUS)
22'-0" (DRIVEWAY)

NOTE:

1. DRAWING PREPARED UNDER JEREMIAH T. BRIDGWOOD - LICENSED PROFESSIONAL ENGINEER IN THE STATE OF NEW YORK; LICENSE NO. 107034, EXPIRATION DATE 11/30/2025, TRC ENGINEERS, INC, LLC, CERTIFICATE OF AUTHORIZATION NO. 001817, 1407 BROADWAY, SUITE 3301, NEW YORK, NEW YORK 10018. DRAWING PREPARED FOR CONNECTGEN, MILL POINT SOLAR PROJECT LOCATED IN MONTGOMERY COUNTY, NY.
2. UNDER NEW YORK STATE EDUCATION LAW ARTICLE 145 (ENGINEERING), SECTION 7209 (2), IT IS A VIOLATION OF THE LAW FOR ANY PERSON, UNLESS ACTING UNDER THE DIRECTION OF A LICENSED PROFESSIONAL ENGINEER, TO ALTER THIS DOCUMENT.

Dig Safely. New York. Call 811 before you dig

PRELIMINARY
NOT FOR CONSTRUCTION

TRC 10 MAXWELL DRIVE, SUITE 200
CLIFTON PARK, NY 12065

PROJECT NO: 443269

REV	DESCRIPTION	DATE	DES	CHK	APP
D	–	–	–	–	.
C	–	–	–	–	.
B	–	–	–	–	.
A	ISSUE FOR 94-C DEFICIENCY SUPPLEMENT	05/31/24	KP	CT	.

STATE OF NEW YORK
JEREMIAH T. BRIDGWOOD
107034
LICENSED PROFESSIONAL ENGINEER

KP DESIGNED
KP DRAWN
CT CHECKED
. APPROVED
REVIEW 1
REVIEW 2

MILL POINT SOLAR 34.5/345KV COLLECTOR SUBSTATION SECTION K-K, L-L, M-M, N-N

(PHYSICAL)

05/31/24 DATE
NTS SCALE

TRC

MPS-E-210-04

REV. A

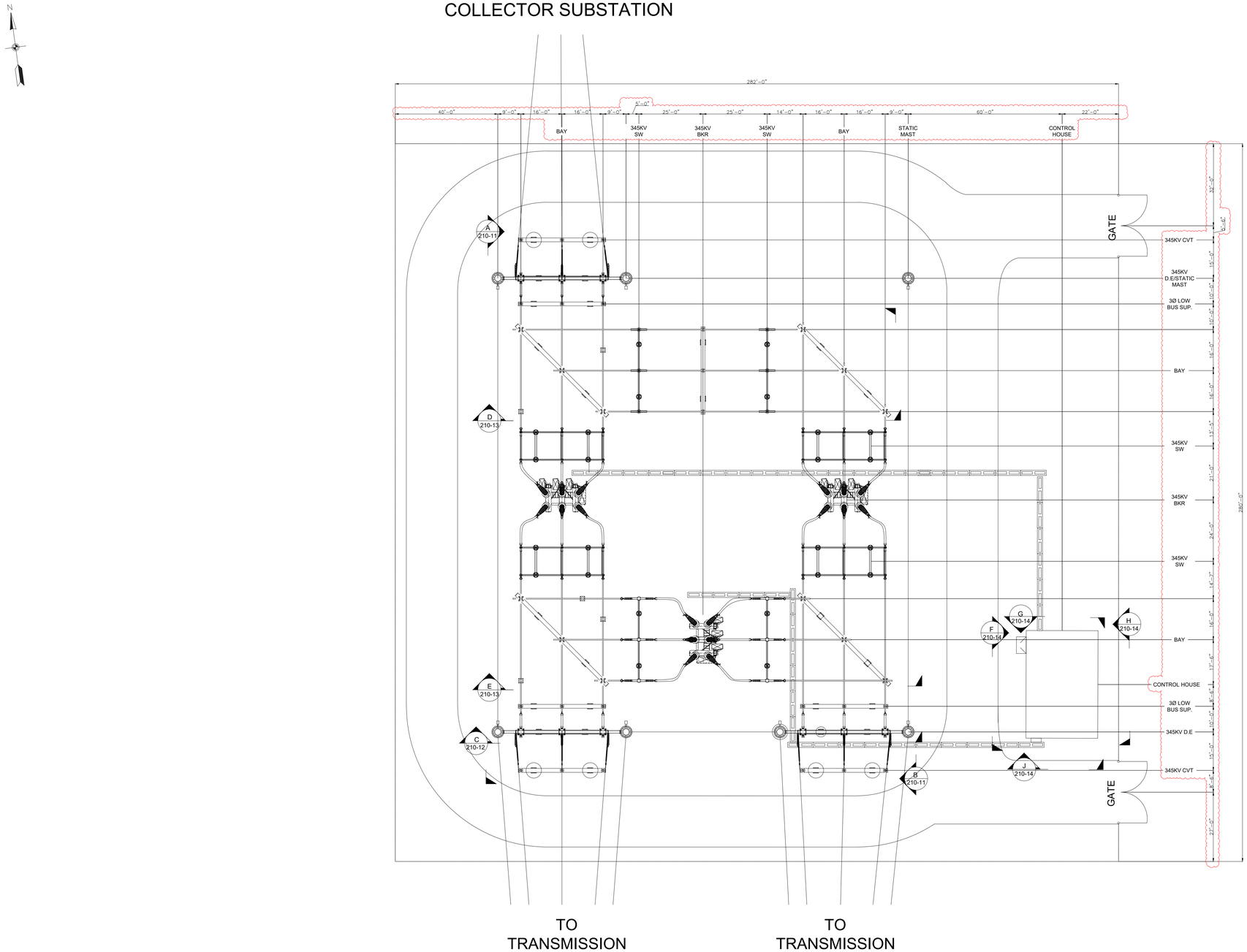

DESIGN CRITERIA:

345kV CLEARANCE: (1300 kV BIL)

LIVE PARTS: MIN Ø-G = 104"
MIN Ø-Ø = 119"

TO GRADE: 10'-0" (BUS)
22'-0" (DRIVEWAY)

NOTE:

1. DRAWING PREPARED UNDER JEREMIAH T. BRIDGWOOD - LICENSED PROFESSIONAL ENGINEER IN THE STATE OF NEW YORK; LICENSE NO. 107034, EXPIRATION DATE 11/30/2025, TRC ENGINEERS, INC, LLC, CERTIFICATE OF AUTHORIZATION NO. 001817, 1407 BROADWAY, SUITE 3301, NEW YORK, NEW YORK 10018. DRAWING PREPARED FOR CONNECTGEN, MILL POINT SOLAR PROJECT LOCATED IN MONTGOMERY COUNTY, NY.
2. UNDER NEW YORK STATE EDUCATION LAW ARTICLE 145 (ENGINEERING), SECTION 7209 (2), IT IS A VIOLATION OF THE LAW FOR ANY PERSON, UNLESS ACTING UNDER THE DIRECTION OF A LICENSED PROFESSIONAL ENGINEER, TO ALTER THIS DOCUMENT.

Dig Safely. New York Call 811 before you dig

PRELIMINARY
NOT FOR CONSTRUCTION

TRC 10 MAXWELL DRIVE, SUITE 200
CLIFTON PARK, NY 12065

PROJECT NO: 443269

REV	DESCRIPTION	DATE	DES	CHK	APP
E	ISSUED FOR 94-C DEFICIENCY SUPPLEMENT	06/28/24	KP	CT	
D	RE-ISSUE FOR 94-C	01/15/24	TB	CT	
C	ISSUE FOR 94-C	10/20/23	TB	CT	
B	RE-ISSUE FOR CLIENT REVIEW	09/06/23	TB	CT	

STATE OF NEW YORK
JEREMIAH T. BRIDGWOOD
107034
LICENSED PROFESSIONAL ENGINEER

TB DESIGNED
EL DRAWN
CT CHECKED
XX APPROVED
REVIEW 1
REVIEW 2

MILL POINT SOLAR 345KV POI SWITCHYARD GENERAL ARRANGEMENT

01/15/24 DATE
NTS SCALE

TRC

MPS-E-210-10

REV. E

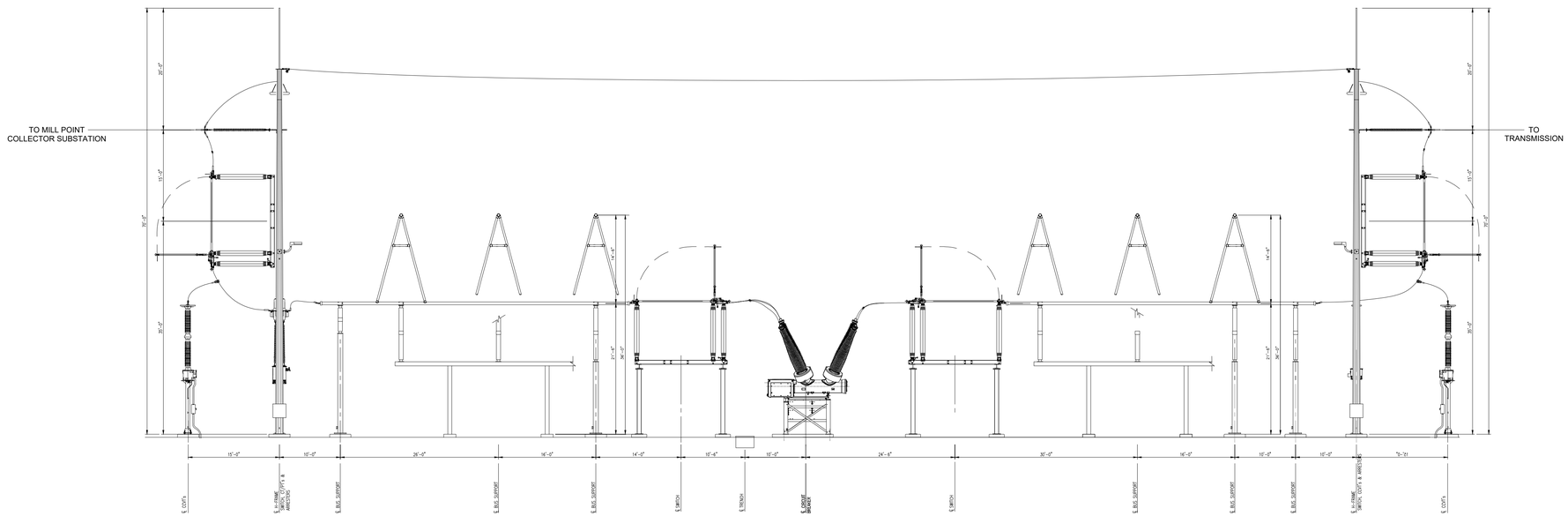

SECTION A-A
SCALE: 1/128"=1'-0"

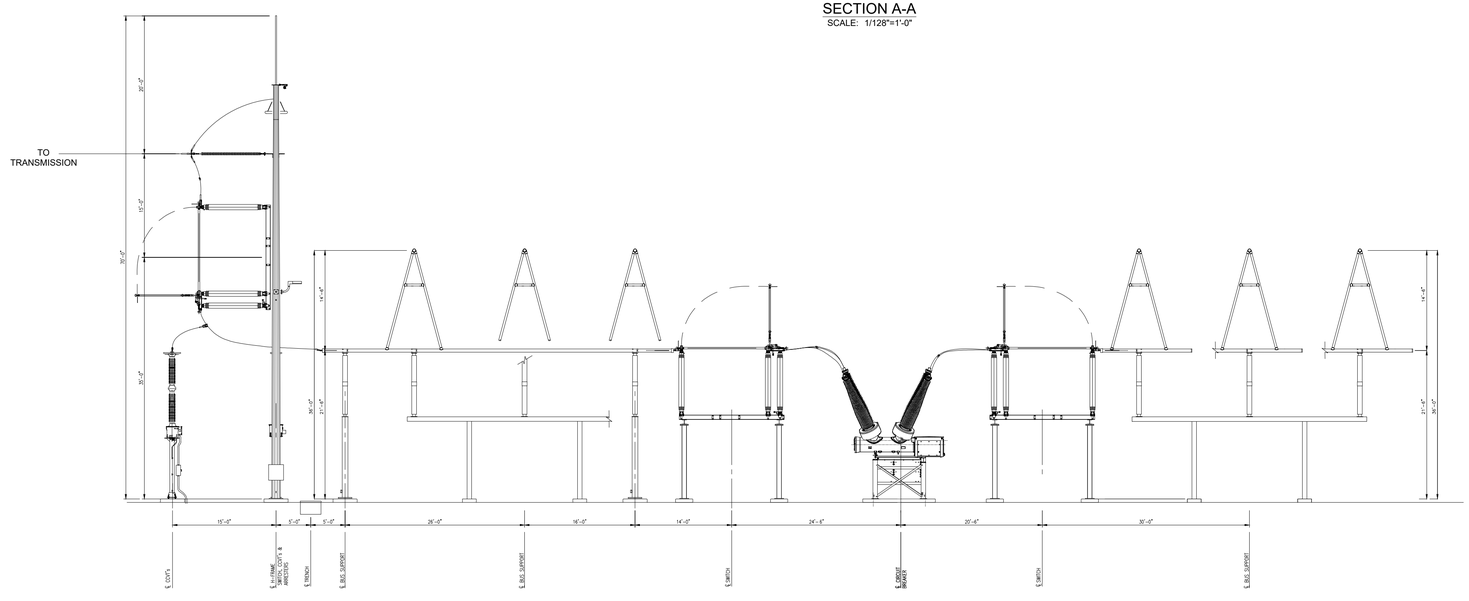

SECTION B-B
SCALE: 1/128"=1'-0"

DESIGN CRITERIA:

345kV CLEARANCE: (1300 kV BIL)

LIVE PARTS: MIN Ø-G = 104"
MIN Ø-Ø = 119"

TO GRADE: 10'-0" (BUS)
22'-0" (DRIVEWAY)

NOTE:

1. DRAWING PREPARED UNDER JEREMIAH T. BRIDGWOOD - LICENSED PROFESSIONAL ENGINEER IN THE STATE OF NEW YORK; LICENSE NO. 107034, EXPIRATION DATE 11/30/2025, TRC ENGINEERS, INC, LLC, CERTIFICATE OF AUTHORIZATION NO. 001817, 1407 BROADWAY, SUITE 3301, NEW YORK, NEW YORK 10018. DRAWING PREPARED FOR CONNECTGEN, MILL POINT SOLAR PROJECT LOCATED IN MONTGOMERY COUNTY, NY.
2. UNDER NEW YORK STATE EDUCATION LAW ARTICLE 145 (ENGINEERING), SECTION 7209 (2), IT IS A VIOLATION OF THE LAW FOR ANY PERSON, UNLESS ACTING UNDER THE DIRECTION OF A LICENSED PROFESSIONAL ENGINEER, TO ALTER THIS DOCUMENT.

Dig Safely. New York
Call 811
before you dig

PRELIMINARY
NOT FOR CONSTRUCTION

TRC
10 MAXWELL DRIVE, SUITE 200
CLIFTON PARK, NY 12065

PROJECT NO: 443269

REV	DESCRIPTION	DATE	DES	CHK	APP
D	RE-ISSUE FOR 94-C	01/15/24	TB	CT	JTB
C	ISSUE FOR 94-C	10/20/23	TB	CT	.
B	RE-ISSUE FOR REVIEW	10/06/23	TB	CT	.
A	ISSUE FOR REVIEW	09/06/23	TB	CT	.

STATE OF NEW YORK
JEREMIAH T. BRIDGWOOD
107034
LICENSED PROFESSIONAL ENGINEER

TB DESIGNED
EL DRAWN
CT CHECKED
JTB APPROVED
REVIEW 1
REVIEW 2

MILL POINT SOLAR 34.5/345KV POI SWITCHYARD SECTION A-A & B-B

(PHYSICAL)

01/15/24
DATE
1/128" = 1'-0"
SCALE

TRC

MPS-E-210-11

REV. D

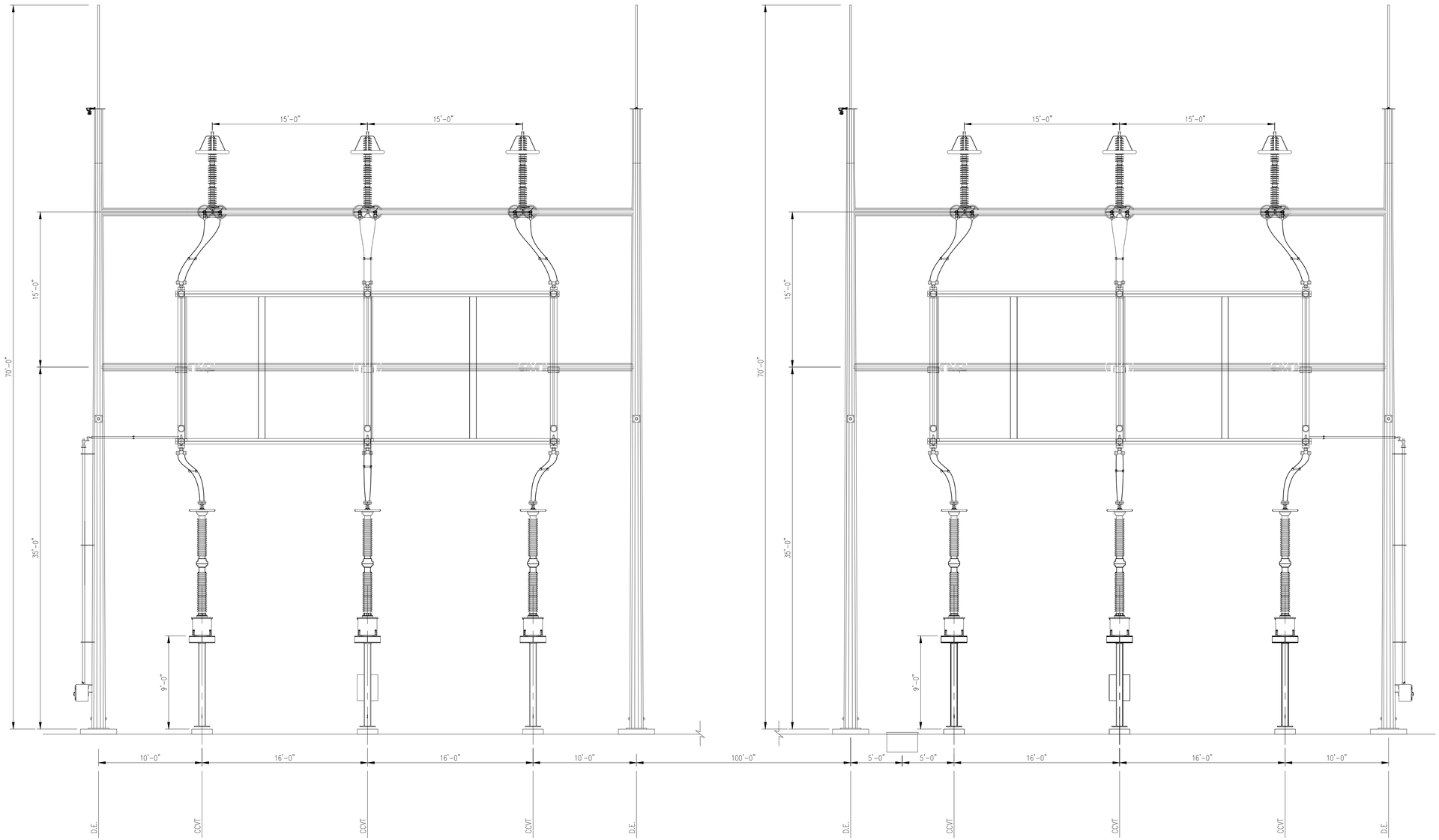

SECTION C-C

SCALE: 1/64"=1'-0"

DESIGN CRITERIA:

345kV CLEARANCE: (1300 kV BIL)

LIVE PARTS: MIN Ø-G = 104"
MIN Ø-Ø = 119"

TO GRADE: 10'-0" (BUS)
22'-0" (DRIVEWAY)

NOTE:

1. DRAWING PREPARED UNDER JEREMIAH T. BRIDGWOOD - LICENSED PROFESSIONAL ENGINEER IN THE STATE OF NEW YORK; LICENSE NO. 107034, EXPIRATION DATE 11/30/2025, TRC ENGINEERS, INC, LLC, CERTIFICATE OF AUTHORIZATION NO. 001817, 1407 BROADWAY, SUITE 3301, NEW YORK, NEW YORK 10018. DRAWING PREPARED FOR CONNECTGEN, MILL POINT SOLAR PROJECT LOCATED IN MONTGOMERY COUNTY, NY.
2. UNDER NEW YORK STATE EDUCATION LAW ARTICLE 145 (ENGINEERING), SECTION 7209 (2), IT IS A VIOLATION OF THE LAW FOR ANY PERSON, UNLESS ACTING UNDER THE DIRECTION OF A LICENSED PROFESSIONAL ENGINEER, TO ALTER THIS DOCUMENT.

Dig Safely. New York Call 811 before you dig

PRELIMINARY
NOT FOR CONSTRUCTION

TRC
10 MAXWELL DRIVE, SUITE 200
CLIFTON PARK, NY 12065

PROJECT NO: 443269

REV	DESCRIPTION	DATE	DES	CHK	APP
D	RE-ISSUE FOR 94-C	01/15/24	TB	CT	JTB
C	ISSUE FOR 94-C	10/20/23	TB	CT	.
B	RE-ISSUE FOR REVIEW	10/06/23	TB	CT	.
A	ISSUE FOR REVIEW	09/06/23	TB	CT	.

STATE OF NEW YORK
JEREMIAH T. BRIDGWOOD
107034
LICENSED PROFESSIONAL ENGINEER

TB DESIGNED
EL DRAWN
CT CHECKED
JTB APPROVED
REVIEW 1
REVIEW 2

MILL POINT SOLAR 34.5/345KV POI SWITCHYARD SECTION C-C

(PHYSICAL)

01/15/24 DATE
1/64" = 1'-0" SCALE

TRC

MPS-E-210-12

REV. D

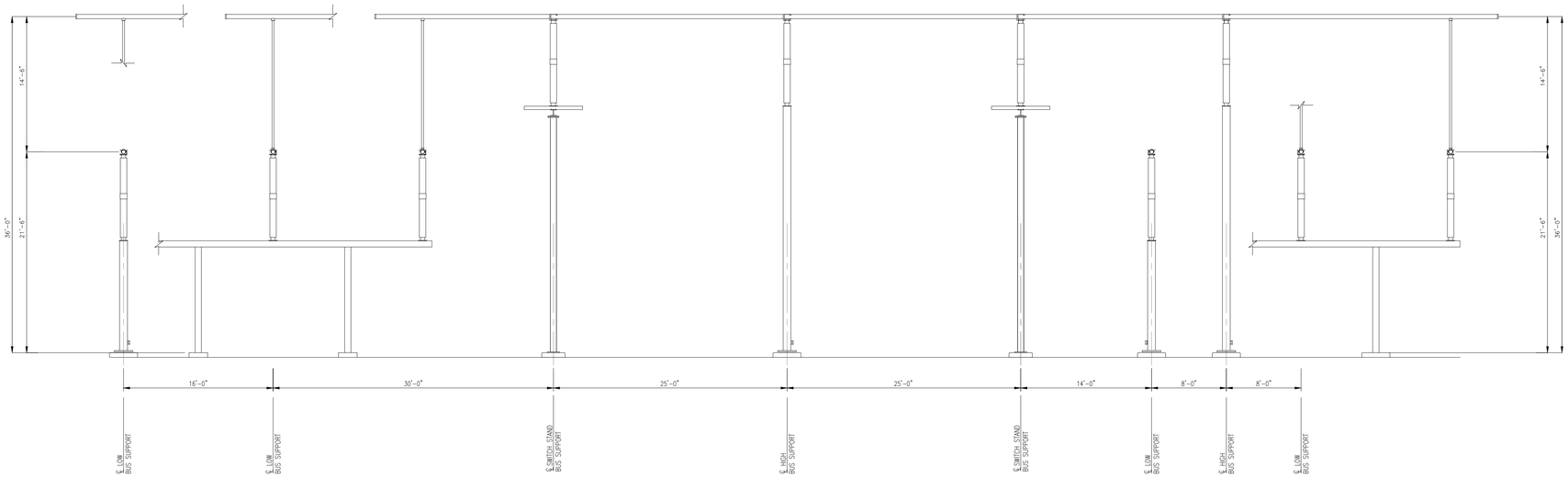

SECTION D-D

SCALE: NTS

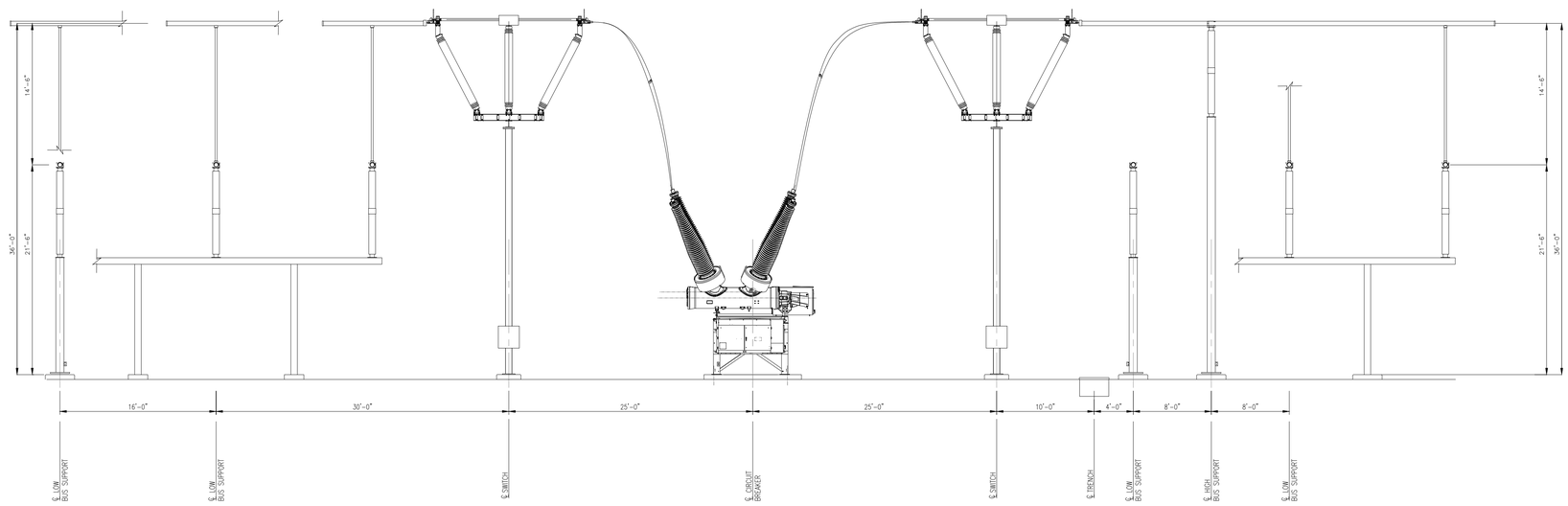

SECTION E-E

SCALE: NTS

DESIGN CRITERIA:

345kV CLEARANCE: (1300 kV BIL)

LIVE PARTS: MIN Ø-G = 104"
MIN Ø-Ø = 119"

TO GRADE: 10'-0" (BUS)
22'-0" (DRIVEWAY)

NOTE:

1. DRAWING PREPARED UNDER JEREMIAH T. BRIDGWOOD - LICENSED PROFESSIONAL ENGINEER IN THE STATE OF NEW YORK; LICENSE NO. 107034, EXPIRATION DATE 11/30/2025, TRC ENGINEERS, INC, LLC, CERTIFICATE OF AUTHORIZATION NO. 001817, 1407 BROADWAY, SUITE 3301, NEW YORK, NEW YORK 10018. DRAWING PREPARED FOR CONNECTGEN, MILL POINT SOLAR PROJECT LOCATED IN MONTGOMERY COUNTY, NY.
2. UNDER NEW YORK STATE EDUCATION LAW ARTICLE 145 (ENGINEERING), SECTION 7209 (2), IT IS A VIOLATION OF THE LAW FOR ANY PERSON, UNLESS ACTING UNDER THE DIRECTION OF A LICENSED PROFESSIONAL ENGINEER, TO ALTER THIS DOCUMENT.

Dig Safely. New York Call811 before you dig

PRELIMINARY
NOT FOR CONSTRUCTION

TRC
10 MAXWELL DRIVE, SUITE 200
CLIFTON PARK, NY 12065

PROJECT NO: 443269

REV	DESCRIPTION	DATE	DES	CHK	APP
D	RE-ISSUE FOR 94-C	01/15/24	TB	CT	JTB
C	ISSUE FOR 94-C	10/20/23	TB	CT	.
B	RE-ISSUE FOR REVIEW	10/06/23	TB	CT	.
A	ISSUE FOR REVIEW	09/06/23	TB	CT	.

STATE OF NEW YORK
JEREMIAH T. BRIDGWOOD
107034
LICENSED PROFESSIONAL ENGINEER

TB DESIGNED
EL DRAWN
CT CHECKED
JTB APPROVED
REVIEW 1
REVIEW 2

MILL POINT SOLAR 34.5/345KV POI SWITCHYARD SECTION D-D & E-E

(PHYSICAL)

01/15/24 DATE
NTS SCALE

TRC

MPS-E-210-13

REV. D

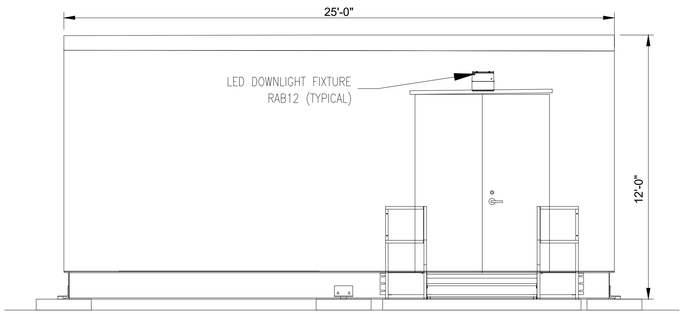

SECTION F-F

SCALE: NTS

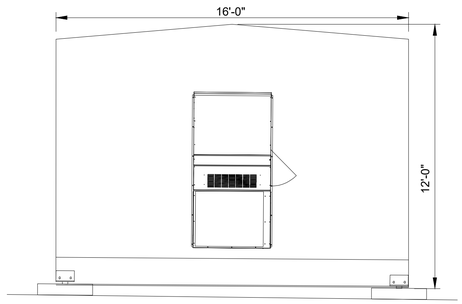

SECTION G-G

SCALE: NTS

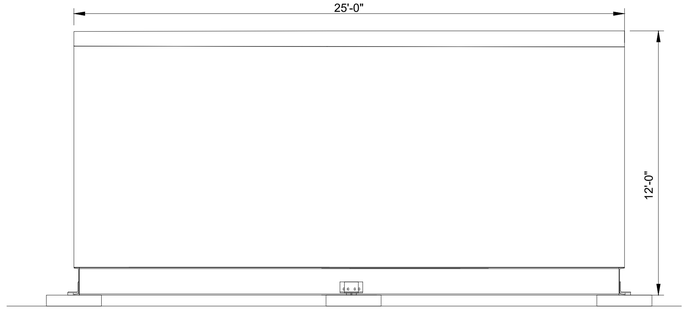

SECTION H-H

SCALE: NTS

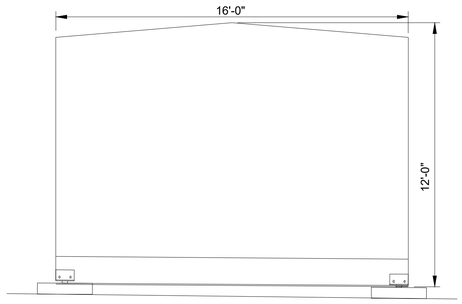

SECTION J-J

SCALE: NTS

NOTES:
1. THE EQUIPMENT AND LAYOUT SHOWN IS FOR CONCEPTUAL USE ONLY.
2. ELECTRICAL EQUIPMENT WILL UTILIZE GALVANIZED STEEL MATERIAL AND EQUIPMENT COLOR WILL BE NATURAL GALVANIZED STEEL, WHITE OR ANSI GRAY. FINAL MATERIAL TYPE AND FINISH COLOR DETAILS WILL BE UPDATED DURING DETAILED DESIGN.

DESIGN CRITERIA:

345kV CLEARANCE: (1300 kV BIL)

LIVE PARTS: MIN Ø-G = 104"
MIN Ø-Ø = 119"

TO GRADE: 10'-0" (BUS)
22'-0" (DRIVEWAY)

NOTE:
1. DRAWING PREPARED UNDER JEREMIAH T. BRIDGWOOD - LICENSED PROFESSIONAL ENGINEER IN THE STATE OF NEW YORK; LICENSE NO. 107034, EXPIRATION DATE 11/30/2025, TRC ENGINEERS, INC, LLC, CERTIFICATE OF AUTHORIZATION NO. 001817, 1407 BROADWAY, SUITE 3301, NEW YORK, NEW YORK 10018. DRAWING PREPARED FOR CONNECTGEN, MILL POINT SOLAR PROJECT LOCATED IN MONTGOMERY COUNTY, NY.
2. UNDER NEW YORK STATE EDUCATION LAW ARTICLE 145 (ENGINEERING), SECTION 7209 (2), IT IS A VIOLATION OF THE LAW FOR ANY PERSON, UNLESS ACTING UNDER THE DIRECTION OF A LICENSED PROFESSIONAL ENGINEER, TO ALTER THIS DOCUMENT.

Dig Safely. New York. Call 811 before you dig

PRELIMINARY
NOT FOR CONSTRUCTION

TRC 10 MAXWELL DRIVE, SUITE 200
CLIFTON PARK, NY 12065

PROJECT NO: 443269

REV	DESCRIPTION	DATE	DES	CHK	APP
E	ISSUE FOR 94-C DEFICIENCY SUPPLEMENT	06/28/24	TB	CT	.
D	RE-ISSUE FOR 94-C	01/15/24	TB	CT	.
C	ISSUE FOR 94-C	10/20/23	TB	CT	.
B	RE-ISSUE FOR REVIEW	10/06/23	TB	CT	.

STATE OF NEW YORK
JEREMIAH T. BRIDGWOOD
107034
LICENSED PROFESSIONAL ENGINEER

TB DESIGNED
EL DRAWN
CT CHECKED
APPROVED
REVIEW 1
REVIEW 2

MILL POINT SOLAR 34.5/345KV POI SWITCHYARD SECTION F-F,G-G,H-H,J-J

(PHYSICAL)

01/15/24 DATE
NTS SCALE

TRC

MPS-E-210-14

REV. E

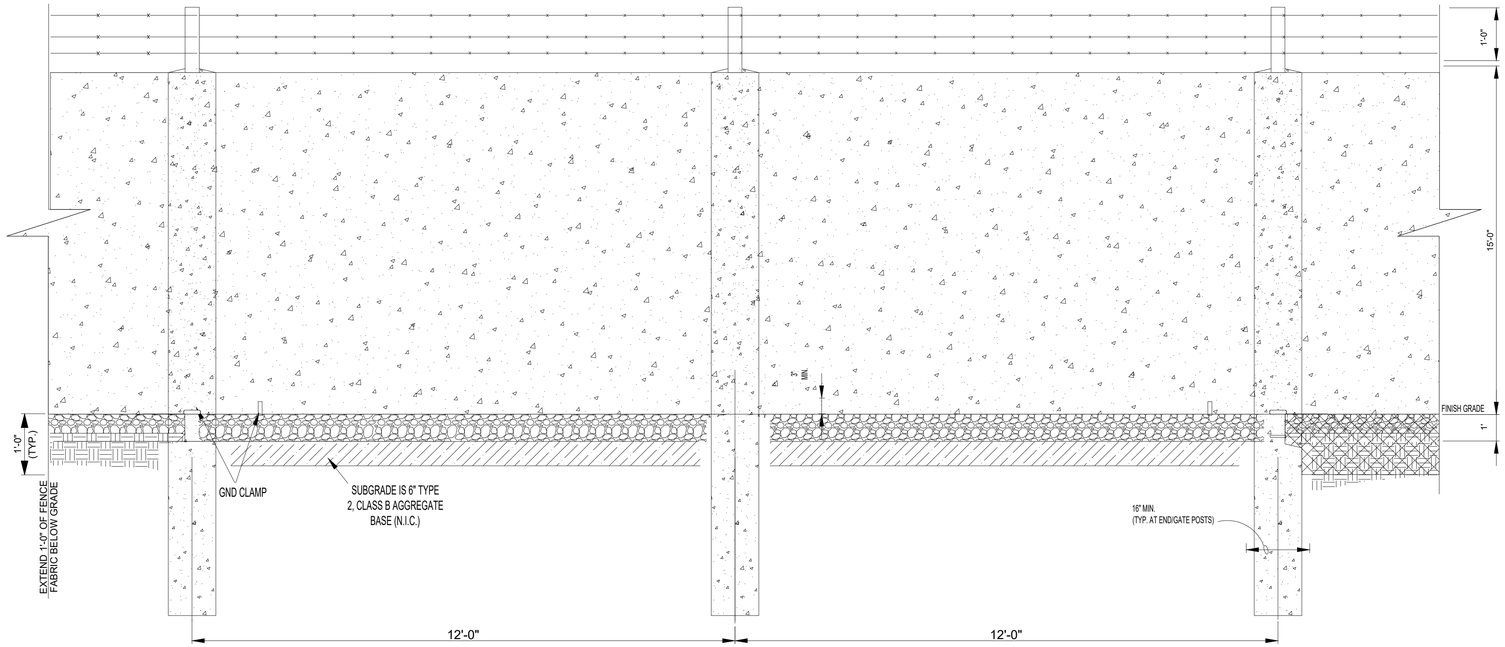

15' HEIGHT SOUND WALL

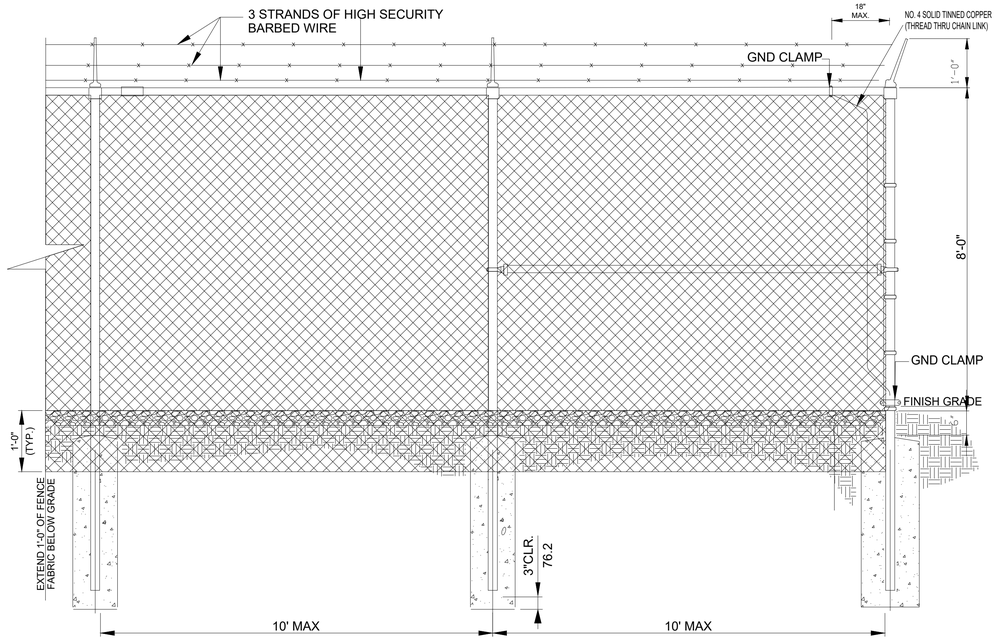

LINE AND CORNER POST ELEVATION FOR CHAIN LINK FENCE

PRELIMINARY
NOT FOR CONSTRUCTION

NOTE:

1. DRAWING PREPARED UNDER JEREMIAH T. BRIDGWOOD - LICENSED PROFESSIONAL ENGINEER IN THE STATE OF NEW YORK; LICENSE NO. 107034, EXPIRATION DATE 11/30/2025, TRC ENGINEERS, INC, LLC, CERTIFICATE OF AUTHORIZATION NO. 001817, 1407 BROADWAY, SUITE 3301, NEW YORK, NEW YORK 10018. DRAWING PREPARED FOR CONNECTGEN, MILL POINT SOLAR PROJECT LOCATED IN MONTGOMERY COUNTY, NY.
2. UNDER NEW YORK STATE EDUCATION LAW ARTICLE 145 (ENGINEERING), SECTION 7209 (2), IT IS A VIOLATION OF THE LAW FOR ANY PERSON, UNLESS ACTING UNDER THE DIRECTION OF A LICENSED PROFESSIONAL ENGINEER, TO ALTER THIS DOCUMENT.

Dig Safely. New York. Call 811 before you dig

TRC 10 MAXWELL DRIVE, SUITE 200
CLIFTON PARK, NY 12065

PROJECT NO: 443269

REV	DESCRIPTION	DATE	DES	CHK	APP
C	RE-ISSUE FOR 94-C	01/15/24	TB	CT	JTB
B	ISSUE FOR 94-C	10/20/23	TB	CT	.
A	ISSUE FOR REVIEW	08/30/23	TB	CT	.

STATE OF NEW YORK · JEREMIAH T. BRIDGWOOD · 107034 · LICENSED PROFESSIONAL ENGINEER

TB DESIGNED
EL DRAWN
CT CHECKED
JTB APPROVED
REVIEW 1
REVIEW 2

MILL POINT SOLAR 34.5/345KV PERIMETER FENCE AND WALL ERECTION DETAILS

(PHYSICAL)

01/15/24 DATE
NOT TO SCALE SCALE

TRC

MPS-E-210-15

REV. C

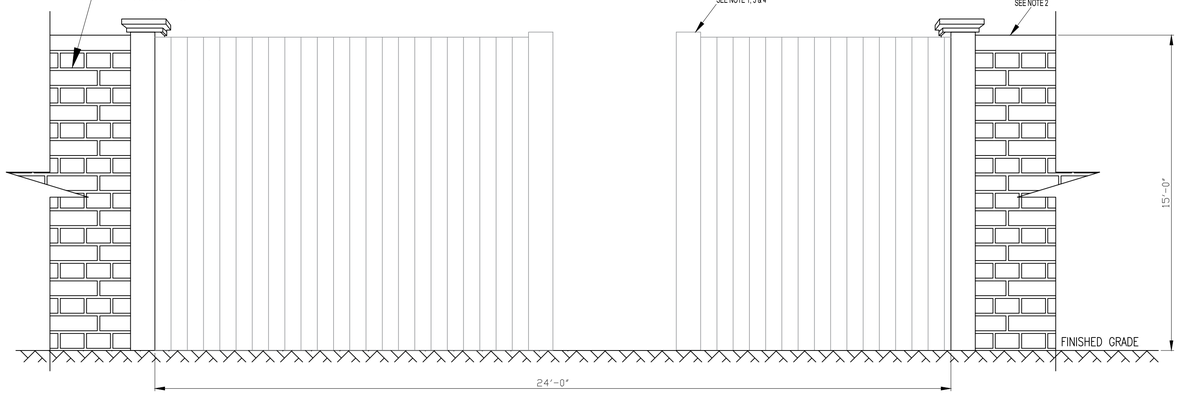

SUBSTATION GATE DETAIL (TBD)

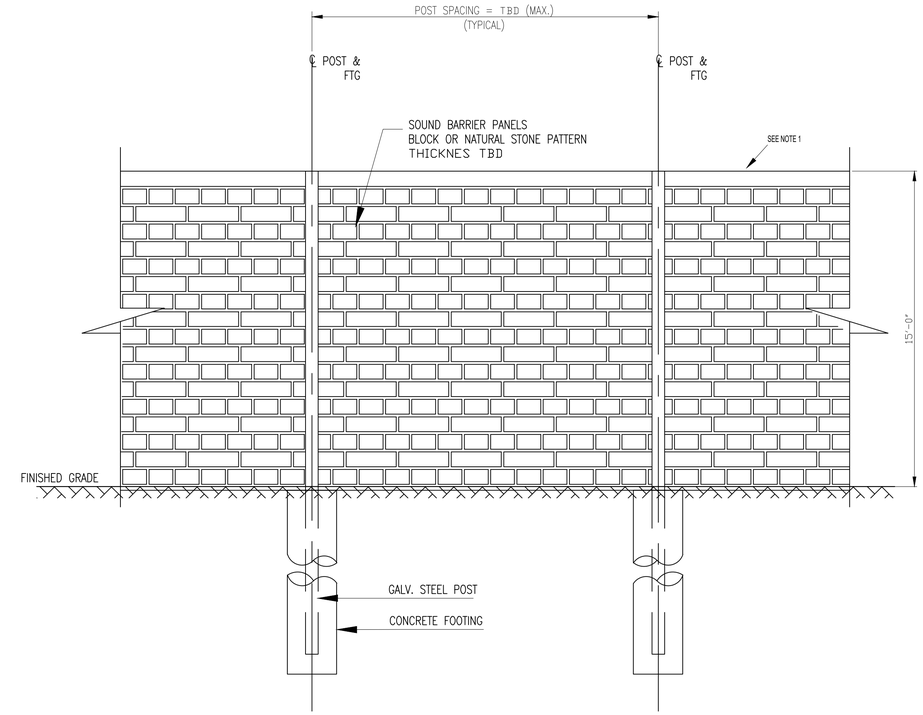

SOUND WALL DETAIL

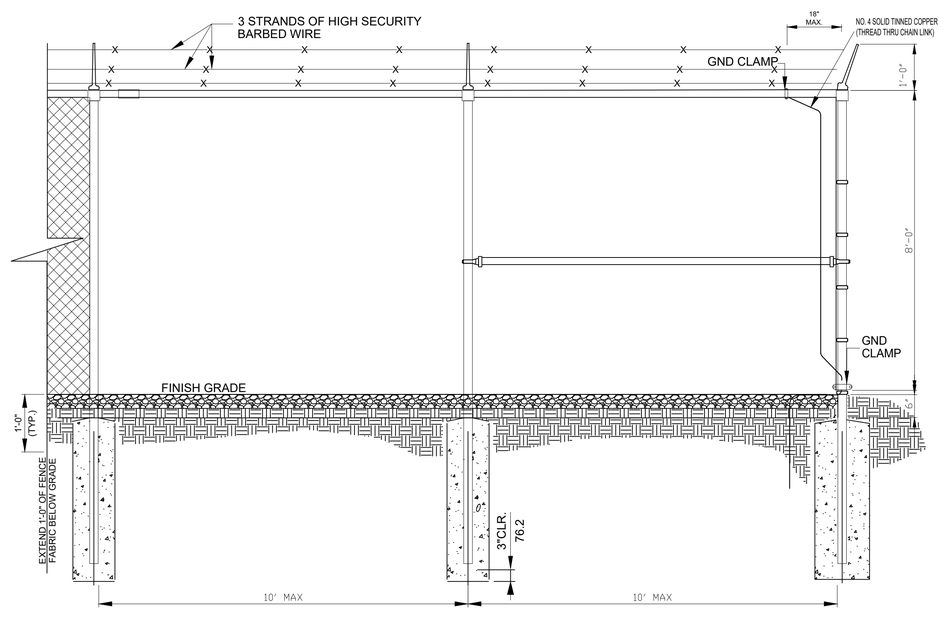

LINE AND CORNER POST ELEVATION

NOTE:
1. THE EQUIPMENT AND LAYOUT SHOWN IS FOR CONCEPTUAL USE ONLY.
2. SOUND WALL WILL UTILIZE NATURAL STONE OR FLAT PRECAST MATERIAL WITH A GRAY, NATURAL, OR TAN COLOR (OR SIMILAR). FINAL MATERIAL TYPE AND FINISH COLOR DETAILS WILL BE UPDATED DURING FINAL DESIGN.
3. GATE MATERIAL AND FINISH WILL COMPRISE OF SOUND ATTENUATING COMPOSITE AND STEEL AND WILL MATCH OR BE SIMILAR TO THE FINISH OF THE SOUND WALL.
4. SUBSTATION GATE WILL BE OPENED AND CLOSED ON A MOTOR DRIVEN TRACK THAT WILL OPERATE INTERMITTENTLY AND ON RARE OCCASIONS WHEN ACCESS TO THE SUBSTATION IS NECESSARY.

DESIGN CRITERIA:

345kV CLEARANCE: (1300 kV BIL)

LIVE PARTS: MIN Ø-G = 104"
MIN Ø-Ø = 119"

TO GRADE: 10'-0" (BUS)
22'-0" (DRIVEWAY)

UNDER NEW YORK STATE EDUCATION LAW ARTICLE 145 (ENGINEERING), SECTION 7209 (2), IT IS A VIOLATION OF THE LAW FOR ANY PERSON, UNLESS ACTING UNDER THE DIRECTION OF A LICENSED PROFESSIONAL ENGINEER, TO ALTER THIS DOCUMENT.

Dig Safely. New York. Call 811 before you dig

PRELIMINARY
NOT FOR CONSTRUCTION

TRC
10 MAXWELL DRIVE, SUITE 200
CLIFTON PARK, NY 12065

PROJECT NO: 443269

REV	DESCRIPTION	DATE	DES	CHK	APP
A	ISSUE FOR 94-C DEFICIENCY SUPPLEMENT	05/31/24	KP	CT	

STATE OF NEW YORK
JEREMIAH T. BRIDGEWOOD
107034
LICENSED PROFESSIONAL ENGINEER

TB DESIGNED
EL DRAWN
CT CHECKED
APPROVED
REVIEW 1
REVIEW 2

MILL POINT SOLAR 34.5/345KV COLLECTOR CHAIN LINK FENCE & WALL DETAILS
(PHYSICAL)

08/30/23 DATE
NTS SCALE

TRC

MPS-E-210-16

REV. A

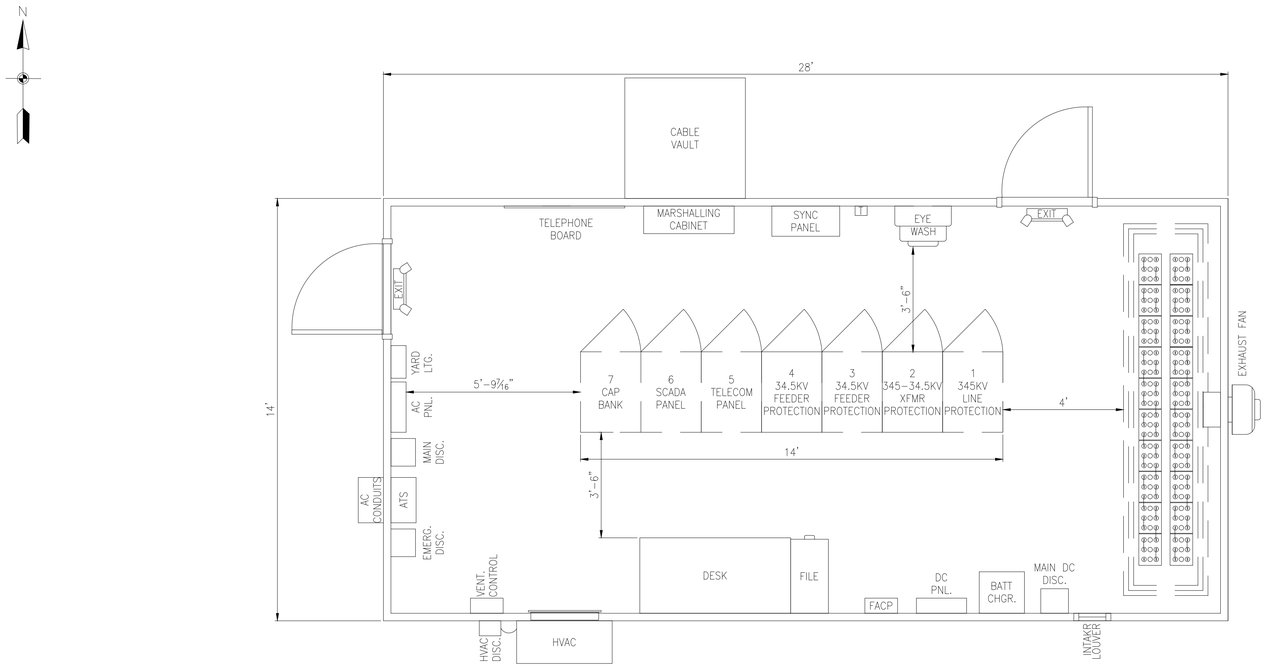

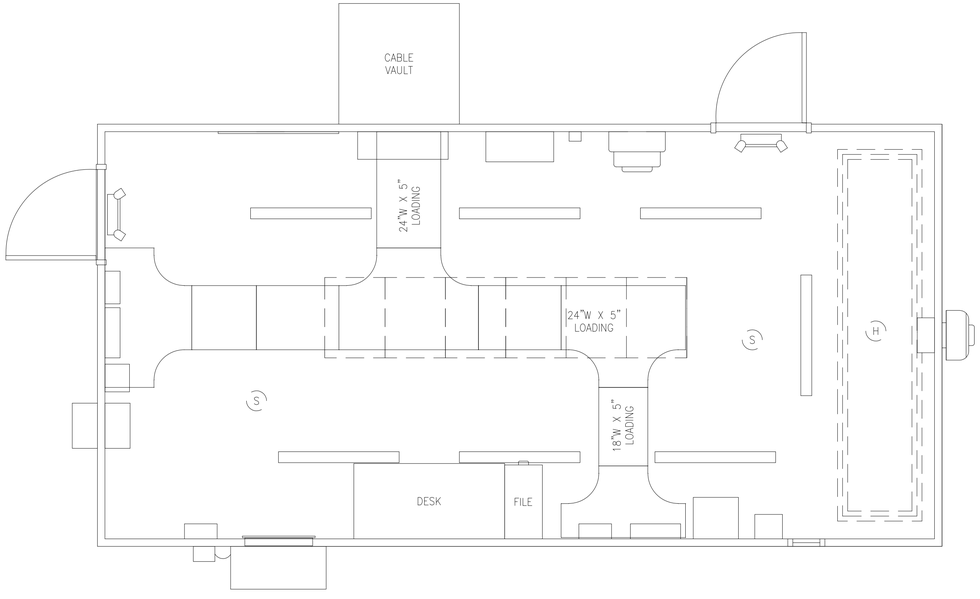

LEGEND:

- LED STRIP LIGHT – 4'
- (H) HYDROGEN DETECTOR
- (S) SMOKE DETECTOR

NOTES:

1. THE GENERAL WIRING METHOD FOR LIGHTING AND RECEPTACLE BRANCH CIRCUITS INSIDE THE CONTROL HOUSE SHALL BE SURFACE MOUNTED 3/4" EMT CONDUIT, WITH #12 THHN CONDUCTORS MINIMUM SIZE.
2. THE ELECTRICAL EQUIPMENT SHOWN LOCATED ON THE BUILDING INTERIOR WALLS SHALL BE SECURED TO MOUNTING CHANNEL WHICH IS ATTACHED TO THE BUILDING STRUCTURE AND SUPPORTED FROM THE CONCRETE FLOOR.
3. ALL AC POWER CIRCUITS SHALL CONTAIN A PROPERLY SIZED EQUIPMENT GROUNDING CONDUCTOR RUN WITH THE PHASE AND NEUTRAL CONDUCTORS.
4. ALL GROUNDING SHALL COMPLY WITH THE NEC AS A MINIMUM REQUIREMENT. A PERIMETER GROUND CONDUCTOR SHALL BE RUN ALONG THE WALL NEAR THE CEILING. CONDUCTOR TO BE SUPPORTED EVERY 4' MINIMUM USING SUPPORT CLIPS. CABLE TRAYS SHALL HAVE A 4/0 BARE COPPER GROUND WIRE IN ALL PARTS OF THE TRAY SYSTEM. CABLE TRAY SHALL BE BONDED AT 5' INTERVALS AND AT EACH FITTING OR SECTION. ALL CABLE TRAY SYSTEMS SHALL BE BONDED TOGETHER AND TO THE BUILDING GROUND SYSTEM. SUPPLEMENTAL GROUNDING IS REQUIRED TO BOND METALLIC FRAMES AND MAJOR EQUIPMENT TO THE GROUNDING ELECTRODE SYSTEM.

NOTE:

1. DRAWING PREPARED UNDER JEREMIAH T. BRIDGWOOD - LICENSED PROFESSIONAL ENGINEER IN THE STATE OF NEW YORK; LICENSE NO. 107034, EXPIRATION DATE 11/30/2025, TRC ENGINEERS, INC, LLC, CERTIFICATE OF AUTHORIZATION NO. 001817, 1407 BROADWAY, SUITE 3301, NEW YORK, NEW YORK 10018. DRAWING PREPARED FOR CONNECTGEN, MILL POINT SOLAR PROJECT LOCATED IN MONTGOMERY COUNTY, NY.
2. UNDER NEW YORK STATE EDUCATION LAW ARTICLE 145 (ENGINEERING), SECTION 7209 (2), IT IS A VIOLATION OF THE LAW FOR ANY PERSON, UNLESS ACTING UNDER THE DIRECTION OF A LICENSED PROFESSIONAL ENGINEER, TO ALTER THIS DOCUMENT.

Dig Safely. New York Call 811 before you dig

PRELIMINARY
NOT FOR CONSTRUCTION

TRC 10 MAXWELL DRIVE, SUITE 200 CLIFTON PARK, NY 12065

PROJECT NO: 443269

REV	DESCRIPTION	DATE	DES	CHK	APP
C	RE-ISSUE FOR 94-C	01/15/24	TB	CT	JTB
B	ISSUE FOR 94-C	10/20/23	TB	CT	.
A	ISSUE FOR REVIEW	08/30/23	TB	CT	.

STATE OF NEW YORK · JEREMIAH T. BRIDGWOOD · 107034 · LICENSED PROFESSIONAL ENGINEER

TB DESIGNED
EL DRAWN
CT CHECKED
JTB APPROVED
REVIEW 1
REVIEW 2

MILL POINT SOLAR 34.5/345KV COLLECTOR SUBSTATION CONTROL HOUSE LAYOUT

(PHYSICAL)

01/15/24 DATE
NTS SCALE

TRC MPS-E-210-20 REV. C

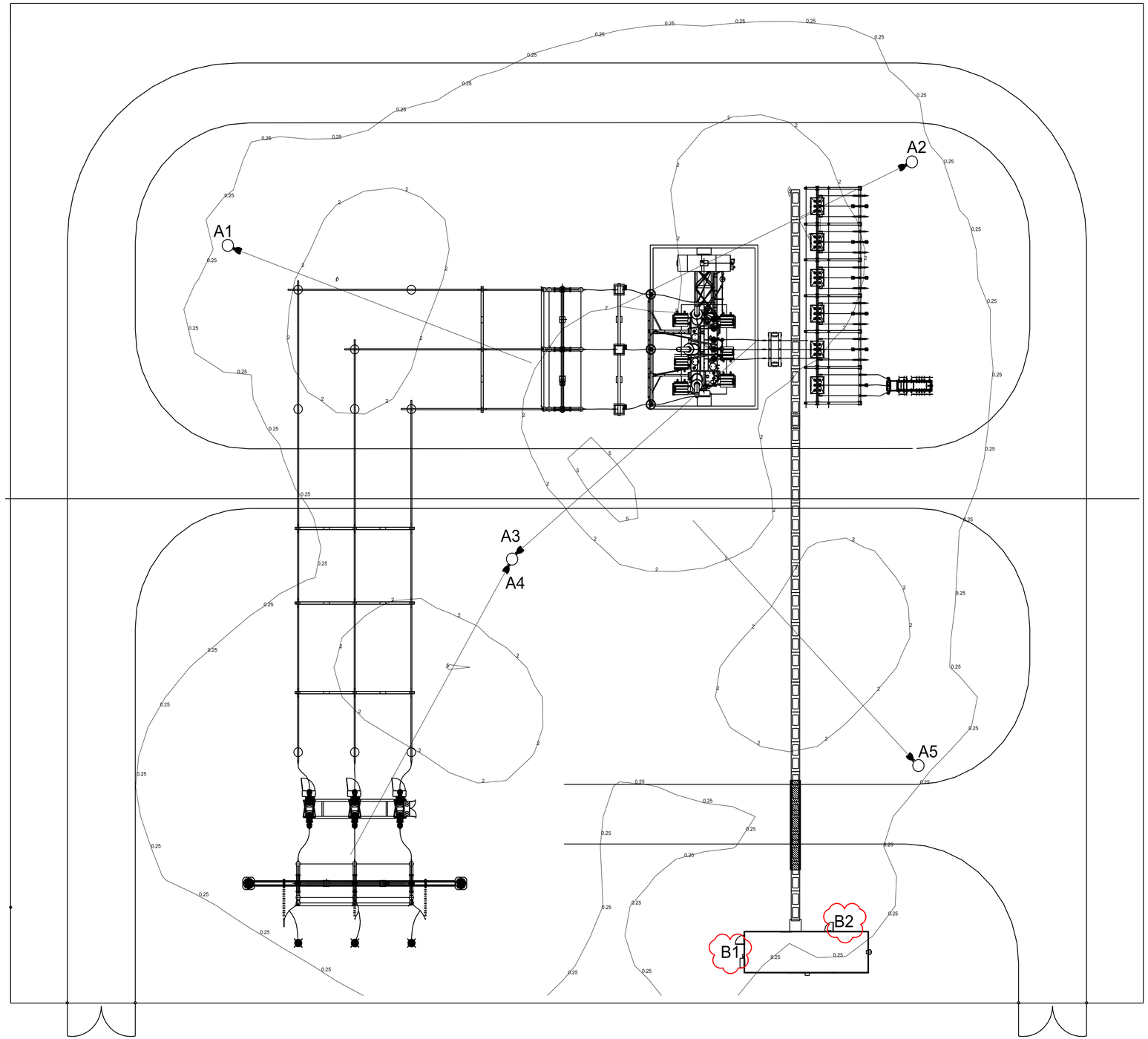

LIGHTING PLAN
SCALE: N.T.S.

TABLE 1 - LIGHTING FIXTURE SCHEDULE

FIXTURE							LAMP	PHOTO-ELECTRIC CONTROL
TYPE	WATTAGE	LIGHT SOURCE	VOLTAGE	WEIGHT (LBS)	LUMENS	NEMA CLASS	MANUFACTURER (GE) ITEM #	MANUFACTURER ITEM #
A1 - A5	357	LED	120V	54	50,700	N/A	AMERICAN ELECTRIC LIGHTING ACP2LED P10 MVOLT 55	N/A
B1 - B2	27.1	LED	120V	33	3,100	N/A	HLWPC2_P10_AMB_120_T2M	N/A

NOTES:
1. LIGHTING CALCULATIONS WERE PERFORMED USING VISUAL 2020, VERSION 2.11
2. PER CODE 19 NYCRR 900-2.9(d)(iii)(a) PERIMETER LIGHTING CONTROL ARE ON/OFF/AUTO
3. SEE DWG. MPS-E-210-01 FOR OVERALL SITE LAYOUT
4. PER CODE 19 NYCRR 900-2.9(d)(iii)(a) LIGHTING FIXTURES WERE DESIGNED TO BE PLACED AT THE LOWEST PRACTICAL HEIGHT AND DIRECTED TO THE GROUND AND/OR WORK AREAS.FIXTURE INSTALLATION HEIGHT AND TILT ARE SHOWN IN THE TABLE BELOW
5. THE NUMBERS ON THE COUNTOURS REPRESENT THE FOOT CANDLE LEVELS AT THAT AREA.

LEGEND:

Ø - LED FLOOD LIGHT
▭ - BUILDING LIGHT

	HEIGHT	ORIENTATION	TILT
A1	30.4'	110°	75°
A2	30.4'	245°	75°
A3	30.4'	50°	75°
A4	30.4'	210°	75°
A5	30.4'	316°	75°
B1	10'	0°	0°
B2	10'	270°	0°

ORIENTATION REFERENCE

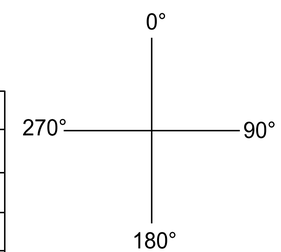

TILT REFERENCE

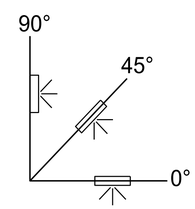

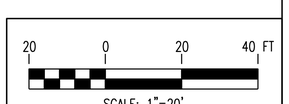

NOTE:
1. DRAWING PREPARED UNDER JEREMIAH T. BRIDGWOOD - LICENSED PROFESSIONAL ENGINEER IN THE STATE OF NEW; LICENSE NO. 107034, EXIPIRATION DATE 11/30/2025, TRC ENGINEERS, INC. CERTIFICATE OF AUTHORIZATION NO. 001817, 1407 BROADWAY, SUITE 3301, NEW YORK, NEW YORK 10018, DRAWING PREPARED FOR CONNECTGE, MILL POINT SOLAR PROJECT LOCATED IN MONTGOMERY COUNTY, NY.
2. UNDER NEW YORK STATE EDUCATION LAW ARTICLE 145 (ENGINEERING), SECTION 7209 (2), IT IS A VIOLATION OF THE LAW FOR ANY PERSON, UNLESS ACTING UNDER THE DIRECTION OF A LICENSED PROFESSIONAL ENGINEER, TO ALTER THIS DOCUMENT.

Dig Safely. New York. Call 811 before you dig

PRELIMINARY
NOT FOR CONSTRUCTION

TRC 10 MAXWELL DRIVE, SUITE 200
CLIFTON PARK, NY 12065

PROJECT NO: 443269

REV	DESCRIPTION	DATE	DES	CHK	APP
D	COMMENT UPDATE RE-ISSUE FOR 94-C	06/28/24	TB	CT	
C	RE-ISSUE FOR 94-C	1/15/24	TB	CT	
B	ISSUE FOR 94-C	10/20/23	MAD	CT	
A	ISSUE FOR REVIEW	8/28/23	MAD	CT	·

STATE OF NEW YORK · JEREMIAH T. BRIDGWOOD · 107034 · LICENSED PROFESSIONAL ENGINEER

TB DESIGNED
TB DRAWN
CT CHECKED
· APPROVED
· REVIEW 1
REVIEW 2
05/24/24 DATE
N.T.S. SCALE

MILL POINT SOLAR 34.5/345KV 345KV COLLECTOR SUBSTATION LIGHTING PLAN

(PHYSICAL)

TRC MPS-E-210-21 REV. D

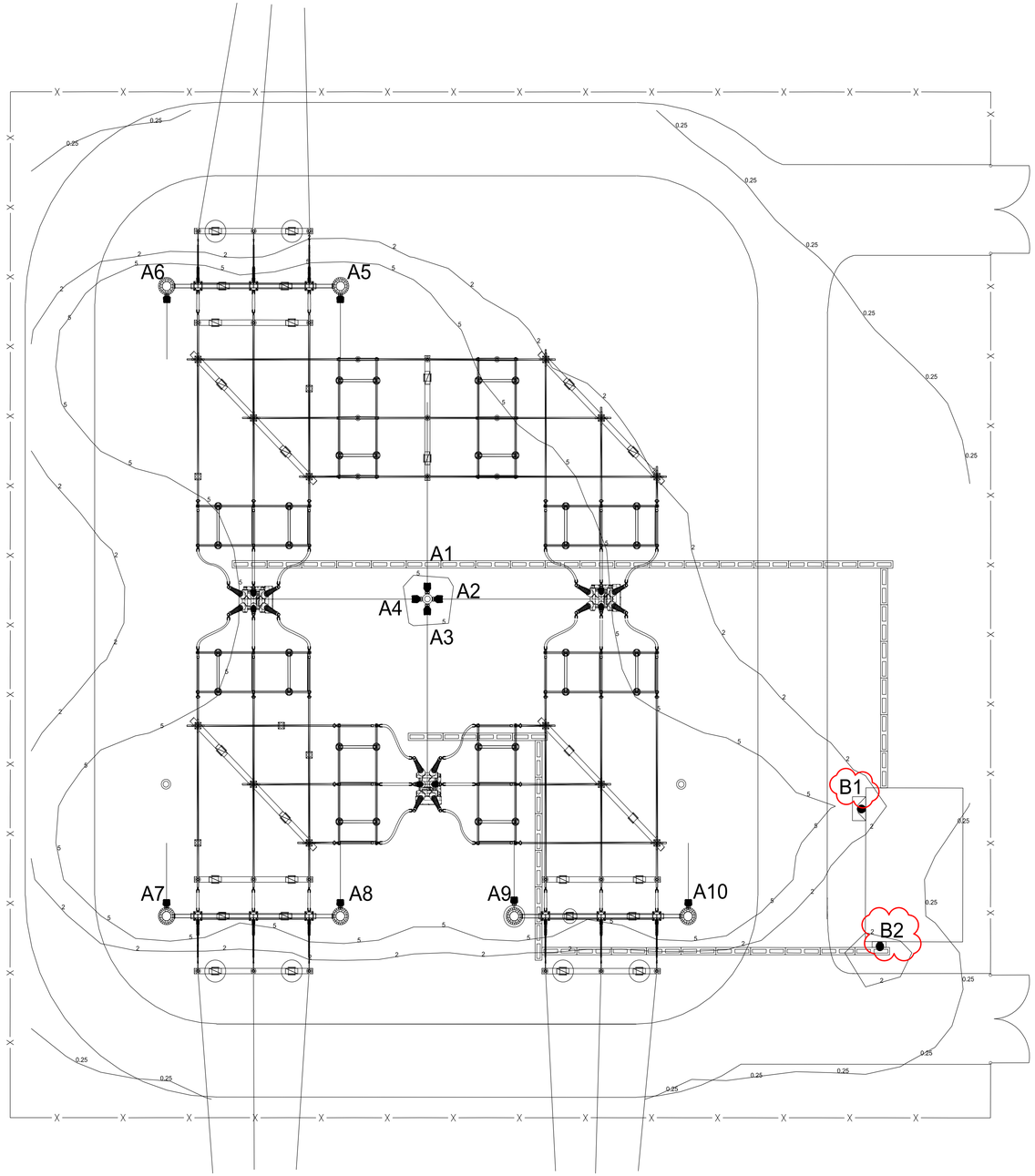

TABLE 1 - LIGHTING FIXTURE SCHEDULE								
FIXTURE							LAMP	PHOTO-ELECTRIC CONTROL
TYPE	WATTAGE	LIGHT SOURCE	VOLTAGE	WEIGHT (LBS)	LUMENS	NEMA CLASS	MANUFACTURER (GE) ITEM #	MANUFACTURER ITEM #
A1 - A10	357	LED	120V	54	50,700	N/A	AMERICAN ELECTRIC LIGHTING ACP2LED P10 MVOLT 55	N/A
B1 - B2	27.1	LED	120V	33	3,100	N/A	HLWPC2_P10_AMB_120_T2M	N/A

NOTES:

1. LIGHTING CALCULATIONS WERE PERFORMED USING VISUAL 2020, VERSION 2.11
2. PER CODE 19 NYCRR 900-2.9(d)(iii)(a) PERIMETER LIGHTING CONTROL ARE ON/OFF/AUTO
3. SEE DWG. MPS-E-210-01 FOR OVERALL SITE LAYOUT
4. PER CODE 19 NYCRR 900-2.9(d)(iii)(a) LIGHTING FIXTURES WERE DESIGNED TO BE PLACED AT THE LOWEST PRACTICAL HEIGHT AND DIRECTED TO THE GROUND AND/OR WORK AREAS.FIXTURE INSTALLATION HEIGHT AND TILT ARE SHOWN IN THE TABLE BELOW
5. THE NUMBERS ON THE COUNTOURS REPRESENT THE FOOT CANDLE LEVELS AT THAT AREA.

LEGEND:

- FIXTURE ON BUILDING
- LED FLOOD LIGHT

	HEIGHT	ORIENTATION	TILT
A1	30'	0°	60°
A2	30'	90°	60°
A3	30'	180°	60°
A4	30'	270°	60°
A5	30'	180°	30°
A6	30'	180°	30°
A7	30'	0°	30°
A8	30'	0°	30°
A9	30'	0°	30°
A10	30'	0°	30°
B1	10'	270°	0°
B2	10'	180°	0°

ORIENTATION REFERENCE

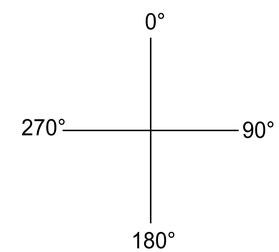

TILT REFERENCE

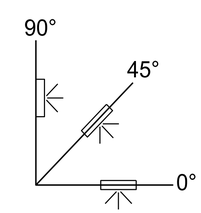

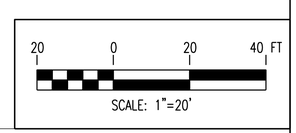

NOTE:

DRAWING PREPARED UNDER JEREMIAH T. BRIDGWOOD - LICENSED PROFESSIONAL ENGINEER IN THE STATE OF NEW; LICENSE NO. 107034, EXIPIRATION DATE 11/30/2025, TRC ENGINEERS, INC. CERTIFICATE OF AUTHORIZATION NO. 001817, 1407 BROADWAY, SUITE 3301, NEW YORK, NEW YORK 10018, DRAWING PREPARED FOR CONNECTGE, MILL POINT SOLAR PROJECT LOCATED IN MONTGOMERY COUNTY, NY.

UNDER NEW YORK STATE EDUCATION LAW ARTICLE 145 (ENGINEERING), SECTION 7209 (2), IT IS A VIOLATION OF THE LAW FOR ANY PERSON, UNLESS ACTING UNDER THE DIRECTION OF A LICENSED PROFESSIONAL ENGINEER, TO ALTER THIS DOCUMENT.

Dig Safely. New York Call 811 before you dig

PRELIMINARY
NOT FOR CONSTRUCTION

TRC
10 MAXWELL DRIVE, SUITE 200
CLIFTON PARK, NY 12065

PROJECT NO: 443269

REV	DESCRIPTION	DATE	DES	CHK	APP
D	COMMENT UPDATES RE-ISSUE FOR 94-C	06/28/24	TB	CT	
C	RE-ISSUE FOR 94-C	1/15/24	MAD	CT	
B	ISSUE FOR 94-C	10/20/23	MAD	CT	
A	ISSUE FOR REVIEW	8/28/23	MAD	CT	·

STATE OF NEW YORK
JEREMIAH T. BRIDGWOOD
107034
LICENSED PROFESSIONAL ENGINEER

TB DESIGNED
TB DRAWN
CT CHECKED
· APPROVED
· REVIEW 1
REVIEW 2
XX/XX/XX DATE
N.T.S. SCALE

MILL POINT SOLAR 345KV POI SWITCHYARD LIGHTING PLAN

(PHYSICAL)

TRC

MPS-E-210-22

REV. D

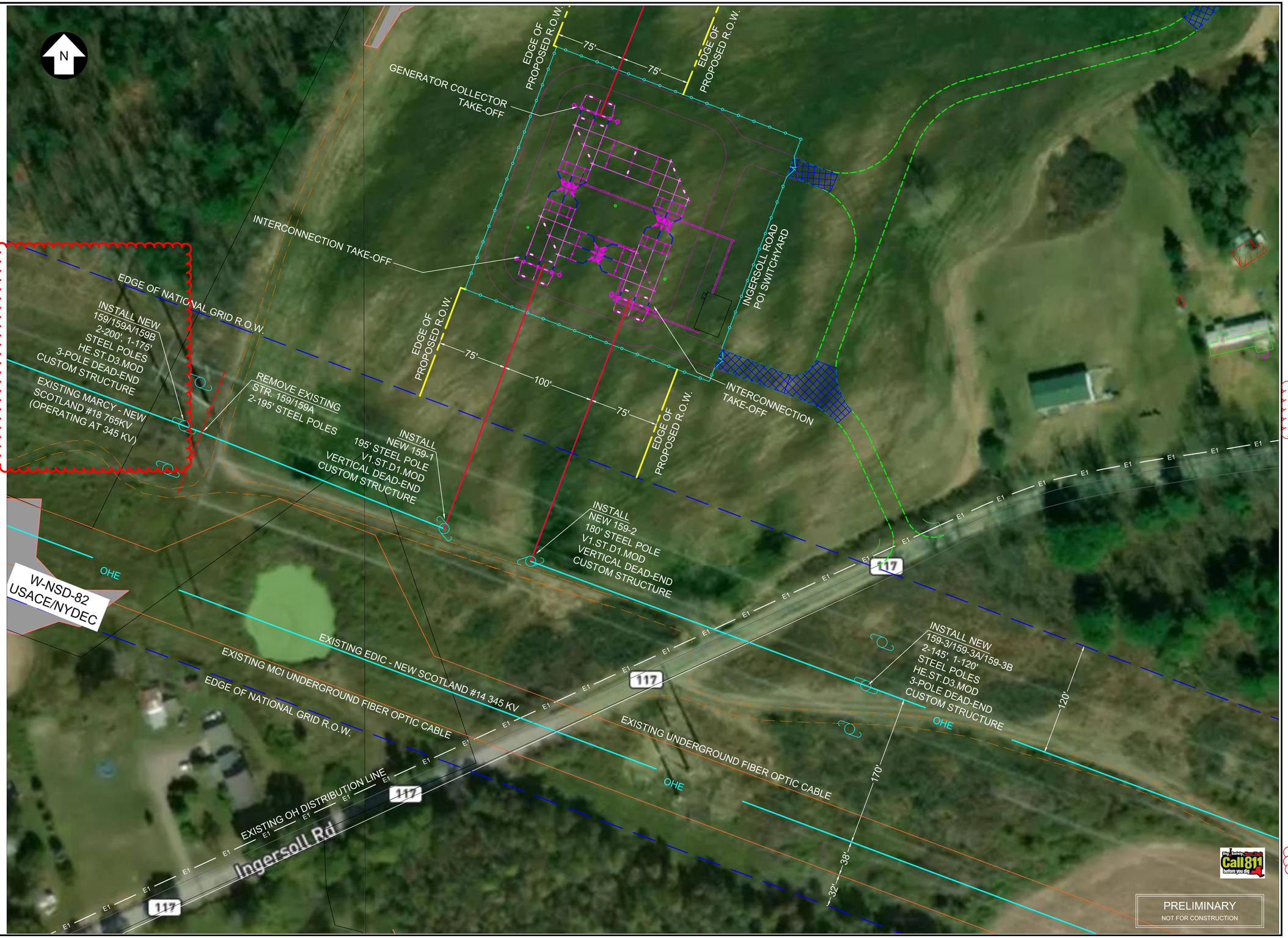

TRC
249 Western Avenue
Augusta, ME 04330

PE STAMP:

STATE OF NEW YORK
KEITH G. MARTIN
No. 099000
LICENSED PROFESSIONAL ENGINEER

KEY PLAN:

REVISIONS:

NO.	DATE	DESCRIPTION
1	10/23/2023	ISSUED FOR 94-C PERMIT
2	07/17/2024	RE-ISSUE FOR 94-C PERMIT
-	-	-
-	-	-
-	-	-
-	-	-
-	-	-
-	-	-

PROJECT TITLE:

MILL POINT SOLAR PROJECT I

PROJECT LOCATION:

TOWN OF GLEN
MONTGOMERY CO., NY

SHEET TITLE & DESCRIPTION:

TRANSMISSION INTERCONNECTION PLAN

-

PROJ NUM:	XXXXXX
DES:	B. HACKLEY
DWN:	B. HACKLEY
CHK:	K. DRZEWIECKI
APV:	A. JAEGER
DATE:	07/17/2024
SCALE AT 22" x 34":	NTS
SHEET NO:	MPS-T-101-01
REV:	2

TRC

249 Western Avenue
Augusta, ME 04330

PE STAMP:

STATE OF NEW YORK
KEVIN G. MARTIN
No. 099030
LICENSED PROFESSIONAL ENGINEER

KEY PLAN:

REVISIONS:

NO.	DATE	DESCRIPTION
1	1/24/2024	ISSUED FOR 94-C PERMIT
2		
-	-	-
-	-	-
-	-	-
-	-	-
-	-	-
-	-	-

PROJECT TITLE:

MILL POINT SOLAR I PROJECT

PROJECT LOCATION:

TOWN OF GLEN
MONTGOMERY CO., NY

SHEET TITLE & DESCRIPTION:

GENERATOR INTERCONNECTION PLAN

-

PROJ NUM:	XXXXXX
DES:	B. HACKLEY
DWN:	B. HACKLEY
CHK:	K. DRZEWIECKI
APV:	A. JAEGER
DATE:	1/24/2024

SCALE AT 22" x 34":

NTS

SHEET NO: MPS-T-101-02

REV: 1

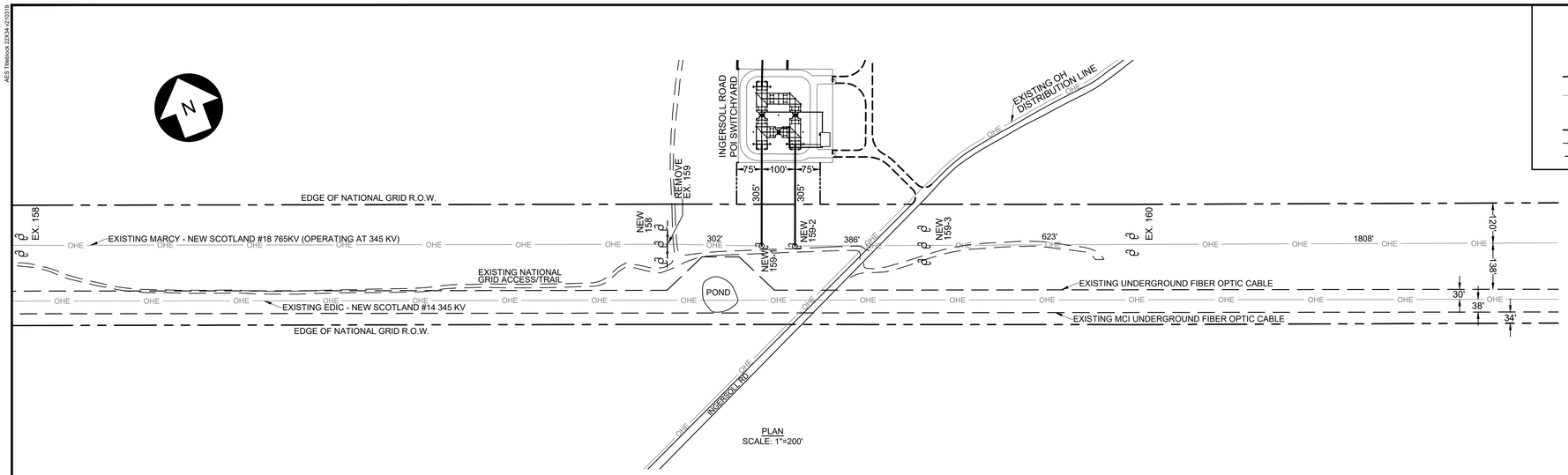

PLAN
SCALE: 1"=200'

LEGEND

EXISTING		PROPOSED
	PROPERTY BOUNDARY	
OHE	OVERHEAD ELECTRIC	
	UTILITY POLE	
	RIGHT OF WAY	
	PAVED ROAD	
	UNDERGROUND FIBER	

GENERAL NOTES:
1. ALL CONDUCTORS AND SHIELDWIRES TO BE NON-SPECULAR.
2. TYPICAL LAYDOWN AREAS TO BE 70'X100' NEAR EACH STRUCTURE INSTALLATION LOCATIONS.
3. ACCESS IN NATIONAL GRID RIGHT-OF-WAY TO UTILIZE EXISTING ACCESS ROADS.
4. ALL NEW STEEL POLES TO BE GALVANIZED STEEL UNLESS OTHERWISE REQUESTED TO BE CORTEN WEATHERED STEEL.

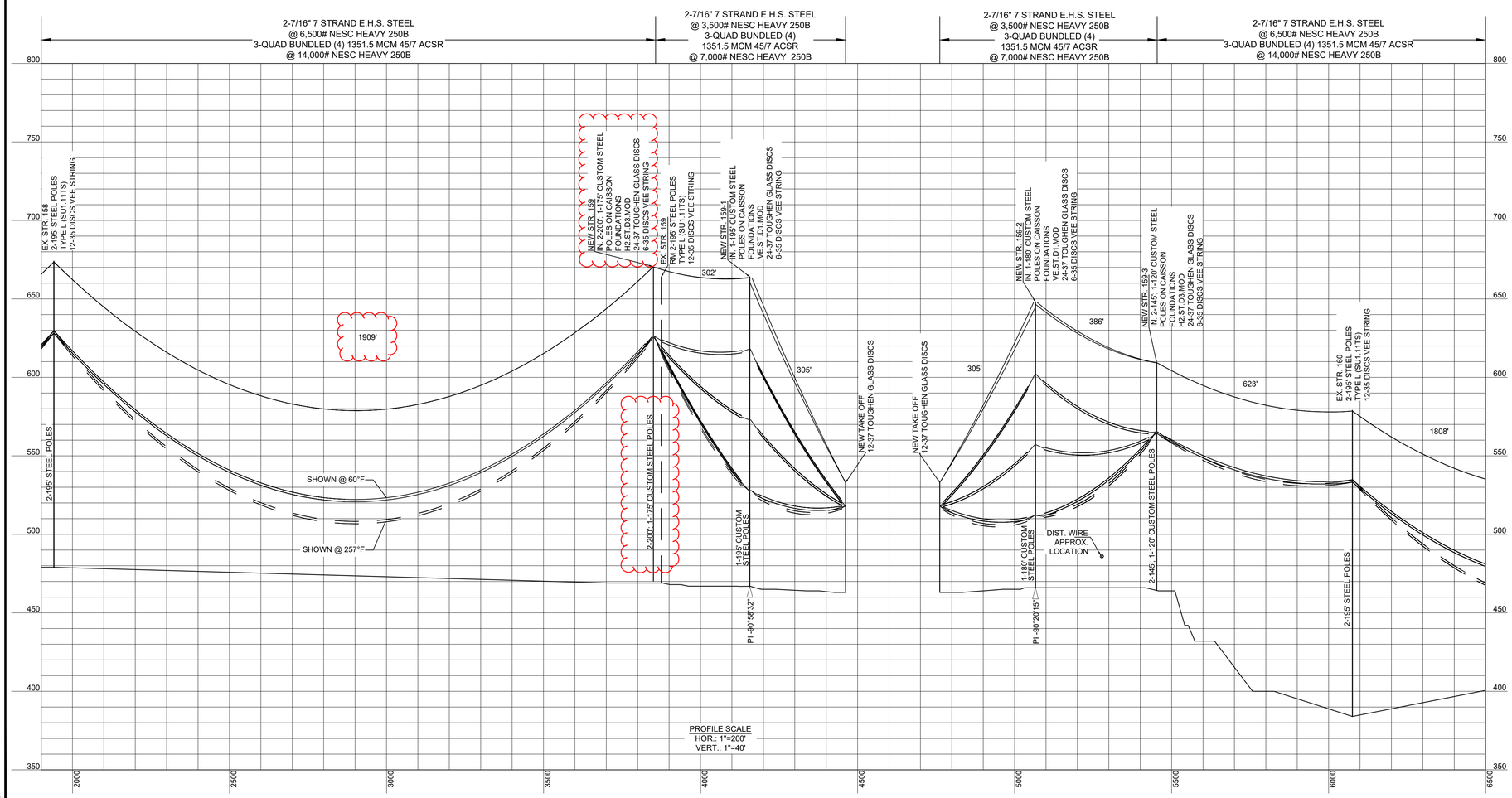

PROFILE SCALE
HOR.: 1"=200'
VERT.: 1"=40'

PRELIMINARY
NOT FOR CONSTRUCTION

Call 811 before you dig

TRC
249 Western Avenue
Augusta, ME 04330

PE STAMP:

STATE OF NEW YORK · KEITH C. MARTIN · No. 099030 · LICENSED PROFESSIONAL ENGINEER

KEY PLAN:

REVISIONS:

NO.	DATE	DESCRIPTION
1	10/23/2023	ISSUED FOR 94-C PERMIT
2	5/23/2024	RE-ISSUED FOR 94-C PERMIT
-	-	-
-	-	-
-	-	-
-	-	-
-	-	-
-	-	-

PROJECT TITLE:

MILL POINT SOLAR PROJECT I

PROJECT LOCATION:

TOWN OF GLEN
MONTGOMERY CO., NY

SHEET TITLE & DESCRIPTION:

TRANSMISSION INTERCONNECTION PLAN & PROFILE

-

PROJ NUM:	XXXXXX
DES:	B. HACKLEY
DWN:	B. HACKLEY
CHK:	K. DRZEWIECKI
APV:	A. JAECKER
DATE:	5/23/2024
SCALE AT 22" x 34":	AS SHOWN
SHEET NO:	MPS-T-102-01
REV:	2

AES Tilebox 22X34 v210519

PLOTTED: 5/23/2024 9:36 PM
C:\users\kingempjpw\54190\588\MPS-T-102-01.dwg
AES Tilebox

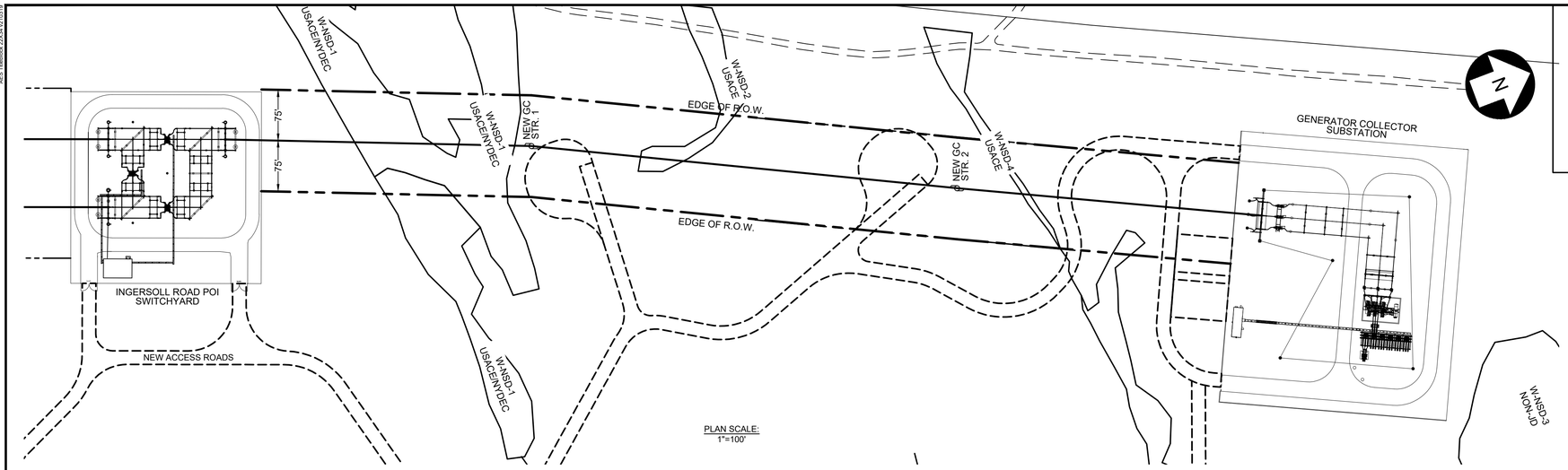

PLAN SCALE:
1"=100'

LEGEND

EXISTING		PROPOSED
	PROPERTY BOUNDARY	
OHE	OVERHEAD ELECTRIC	
	UTILITY POLE	
	RIGHT OF WAY	
	PAVED ROAD	
	UNDERGROUND FIBER	

GENERAL NOTES:
1. ALL CONDUCTORS AND SHIELDWIRES TO BE NON-SPECULAR.
2. TYPICAL LAYDOWN AREAS TO BE 70'X100' NEAR EACH STRUCTURE INSTALLATION LOCATIONS.
3. ACCESS TO NEW RIGHT-OF-WAY TO UTILIZE NEW ACCESS ROADS.
4. ALL NEW STEEL POLES TO BE GALVANIZED STEEL UNLESS OTHERWISE REQUESTED TO BE CORTEN WEATHERED STEEL.

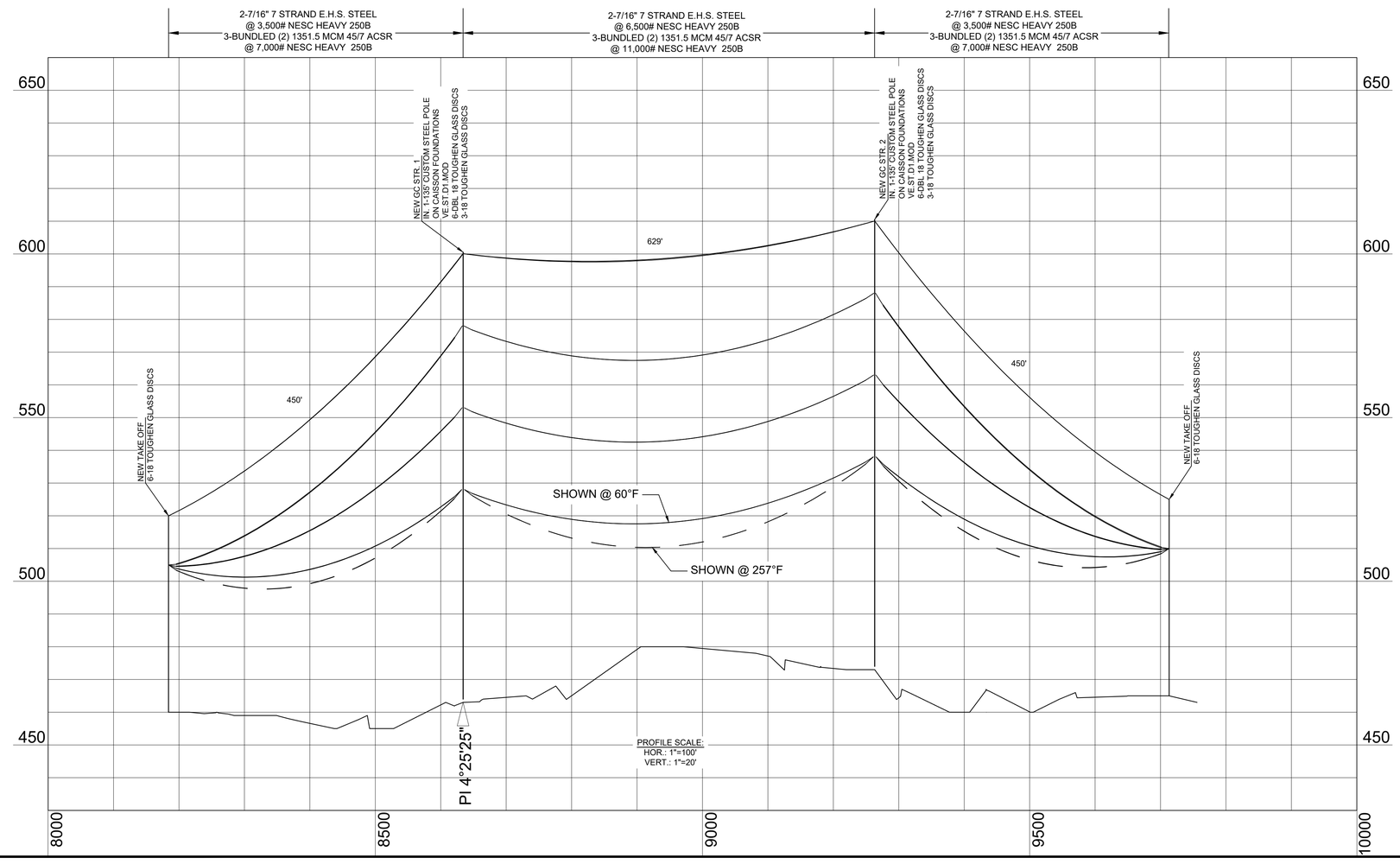

PRELIMINARY
NOT FOR CONSTRUCTION

TRC
249 Western Avenue
Augusta, ME 04330

PE STAMP:

STATE OF NEW YORK
KEITH G. MARTIN
No. 099030
LICENSED PROFESSIONAL ENGINEER

KEY PLAN:

REVISIONS:

NO.	DATE	DESCRIPTION
1	1/24/2024	ISSUED FOR 94-C PERMIT
2		
-	-	-
-	-	-
-	-	-
-	-	-
-	-	-
-	-	-

PROJECT TITLE:

MILL POINT SOLAR I PROJECT

PROJECT LOCATION:

TOWN OF GLEN
MONTGOMERY CO., NY

SHEET TITLE & DESCRIPTION:

GENERATOR INTERCONNECTION PLAN & PROFILE

-

PROJ NUM:	XXXXXX
DES:	B. HACKLEY
DWN:	B. HACKLEY
CHK:	K. DRZEWIECKI
APV:	A. JAEGER
DATE:	1/24/2024

SCALE AT 22" x 34":

AS SHOWN

SHEET NO: MPS-T-102-02

REV: 1

AES Titleblock 22X34 v210519
PLOTTED: 1/24/2024 9:47 AM
C:\pwwork\aspen\pw\ut4105688\MPS-T-102-02.dwg
XREFS: ...\MILLPOINT\ACAD\SITE\TOPO.dwg ...\ut4105688\MPS-T-102-01.dwg ut4105688\Mill Point Additions (0033).dwg ut4105688\Mill Point Well Locations (Sent 1-13-23).dwg ut4105688\MILL POINT ELECTRICAL LAYOUT COLLECTOR STATION.dwg

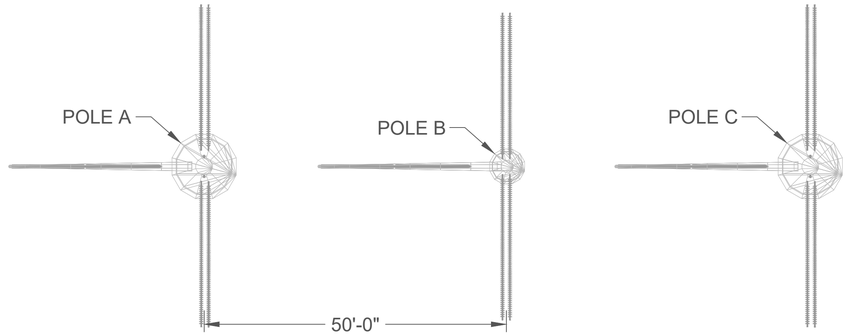

PLAN VIEW

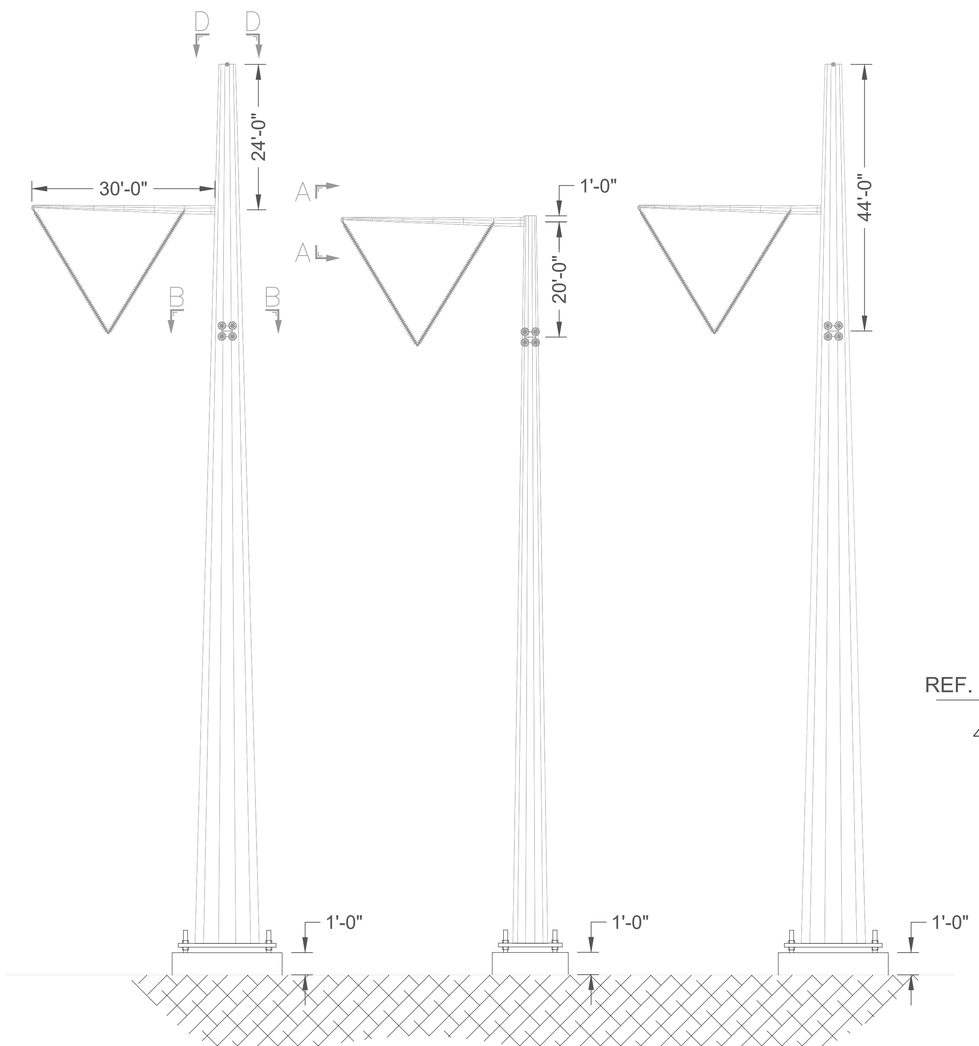

FRONT ELEVATION

STRUCTURE INFORMATION										
STRUCTURE NUMBER	LINE ANGLE α (DEG.)	STRUCTURE HEIGHT (FT.)			DISCS/ STRING	DISCS/ LOOP STRING	STRINGS/ PHASE	LOOP STRINGS/ PHASE	DESIGN VOLTAGE	OPERATING VOLTAGE
		POLE A	POLE B	POLE C						
159	0°	200'-0"	175'-0"	200'-0"	37	35	8	2	765 kV	345 kV
159-3	0°	145'-0"	120'-0"	145'-0"	37	35	8	2	765 kV	345 kV

NOTES:
ALL INSULATOR DISCS TO BE TOUGHENED GLASS.
ALL POLES TO BE GALVANIZED STEEL UNLESS OTHERWISE REQUESTED TO BE CORTEN WEATHERED STEEL.
ALL POLES INSTALLED ON CAISSON FOUNDATION WITH 1'-0" REVEAL.

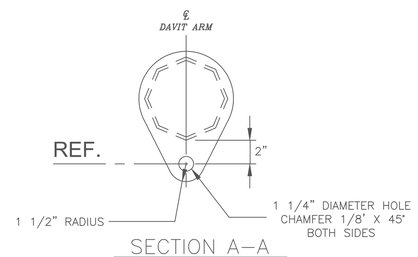

SECTION A–A

CONDUCTOR ATTACHMENT PLATES
(TYPICAL 3 LOCATIONS)

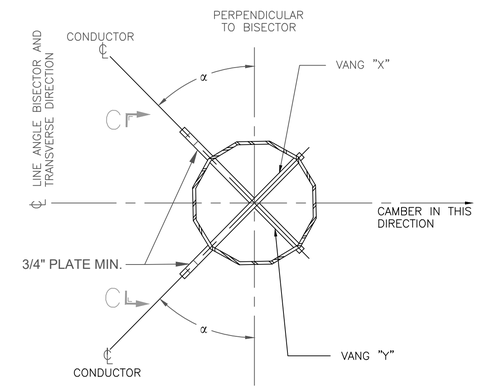

SECTION B–B

(TYPICAL 3 LOCATIONS)

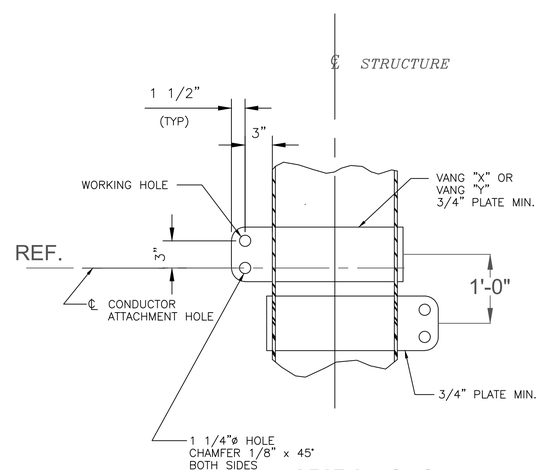

SECTION C–C

(TYPICAL 3 LOCATIONS)

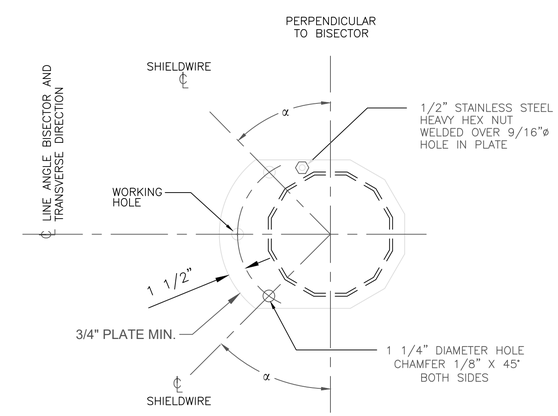

SECTION D–D

POLE CAP WITH SHIELD WIRE
ATTACHMENT AND GROUNDING NUT

PRELIMINARY
NOT FOR CONSTRUCTION

TRC
249 Western Avenue
Augusta, ME 04330

PE STAMP:

KEY PLAN:

REVISIONS:

NO.	DATE	DESCRIPTION
1	10/23/2023	ISSUED FOR 94-C PERMIT
2	07/17/2024	RE-ISSUED FOR 94-C PERMIT
-	-	-
-	-	-
-	-	-
-	-	-
-	-	-
-	-	-

PROJECT TITLE:

MILL POINT SOLAR
PROJECT I

PROJECT LOCATION:

TOWN OF GLEN
MONTGOMERY CO., NY

SHEET TITLE & DESCRIPTION:

HE.ST.D3.MOD
3-STEEL POLE
DEAD-END

-

PROJ NUM:	XXXXXX
DES:	B. HACKLEY
DWN:	B. HACKLEY
CHK:	K. DRZEWIECKI
APV:	A. JAEGER
DATE:	07/17/2024

SCALE AT 22" x 34":

NTS

SHEET NO: MPS-T-103-01

REV: 2

AES Tilehurst 22KVA v210519
PLOTTED: 7/17/2024 10:01 AM
C:\Users\klagerquist\AppData\Local\Temp\AcPublish_16416\Drawing\MPS-T-103-01.dwg

AES Tilehurst 22KVA v210519

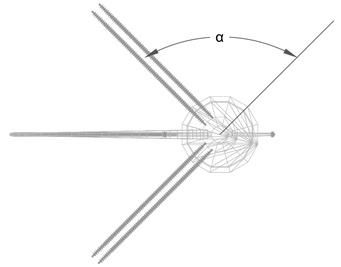

PLAN VIEW

STRUCTURE INFORMATION								
STRUCTURE NUMBER	LINE ANGLE α (DEG.)	STRUCTURE HEIGHT (FT.)	DISCS/ STRING	DISCS/ LOOP STRING	STRINGS/ PHASE	LOOP STRINGS/ PHASE	DESIGN VOLTAGE	OPERATING VOLTAGE
159-1	90°58'32"	195'-0"	37	35	8	2	765 kV	345 kV
159-2	-90°20'15"	180'-0"	37	35	8	2	765 kV	345 kV

NOTES:
ALL INSULATOR DISCS TO BE TOUGHENED GLASS.
ALL POLES TO BE GALVANIZED STEEL UNLESS OTHERWISE REQUESTED TO BE CORTEN WEATHERED STEEL.
ALL POLES INSTALLED ON CAISSON FOUNDATION WITH 1'-0" REVEAL.

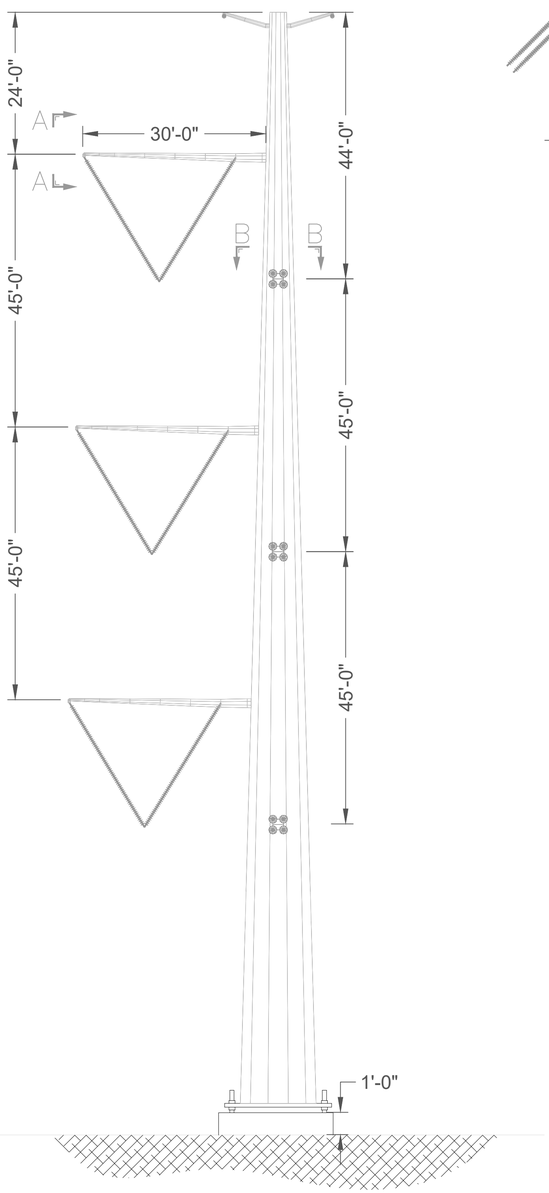

FRONT ELEVATION

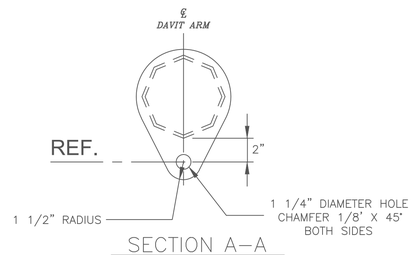

SECTION A–A

CONDUCTOR/SHIELDWIRE ATTACHMENT PLATES
(TYPICAL 4 LOCATIONS)

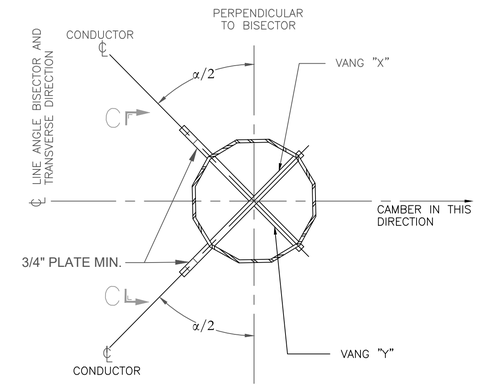

SECTION B–B

(TYPICAL 3 LOCATIONS)

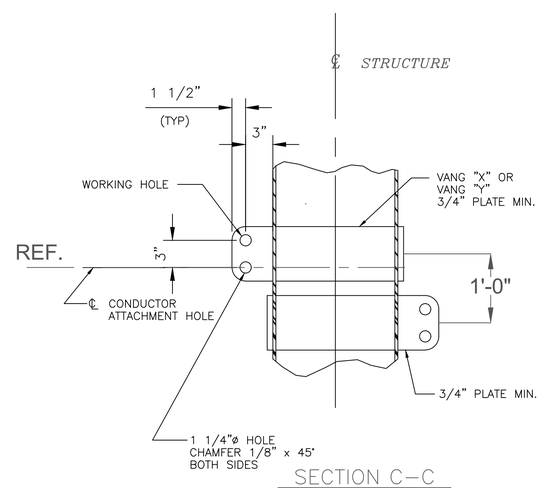

SECTION C–C

(TYPICAL 3 LOCATIONS)

PRELIMINARY
NOT FOR CONSTRUCTION

TRC
249 Western Avenue
Augusta, ME 04330

PE STAMP:

STATE OF NEW YORK
KEITH G. MARTIN
No. 099000
LICENSED PROFESSIONAL ENGINEER

KEY PLAN:

REVISIONS:

NO.	DATE	DESCRIPTION
1	10/23/2023	ISSUED FOR 94-C PERMIT
2		
-	-	-
-	-	-
-	-	-
-	-	-
-	-	-
-	-	-

PROJECT TITLE:

MILL POINT SOLAR I PROJECT

PROJECT LOCATION:

TOWN OF GLEN
MONTGOMERY CO., NY

SHEET TITLE & DESCRIPTION:

V1.ST.D1.MOD
VERTICAL STEEL POLE
DEAD-END

-

PROJ NUM:	XXXXXX
DES:	B. HACKLEY
DWN:	B. HACKLEY
CHK:	K. DRZEWIECKI
APV:	A. JAEGER
DATE:	10/23/2023

SCALE AT 22" x 34":

NTS

SHEET NO: MPS-T-103-02
REV: 1

PLOTTED: 11/7/2023 5:23 PM
C:\pwworking\engn\jxr\d1461608\MPS-T-103-02.dwg
Chris.Drzewiecki

STRUCTURE INFORMATION								
STRUCTURE NUMBER	LINE ANGLE α (DEG.)	STRUCTURE HEIGHT (FT.)	DISCS/ STRING	DISCS/ LOOP STRING	STRINGS/ PHASE	LOOP STRINGS/ PHASE	DESIGN VOLTAGE	OPERATING VOLTAGE
GC STR. 1	4°25'25"	135'-0"	18	18	4	1	345 kV	345 kV
GC STR. 2	0°0'0"	135'-0"	18	18	4	1	345 kV	345 kV

NOTES:
ALL INSULATOR DISCS TO BE TOUGHENED GLASS.
ALL POLES TO BE GALVANIZED STEEL UNLESS OTHERWISE REQUESTED TO BE CORTEN WEATHERED STEEL.
ALL POLES INSTALLED ON CAISSON FOUNDATION WITH 1'-0" REVEAL.

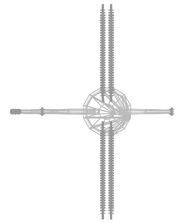

PLAN VIEW

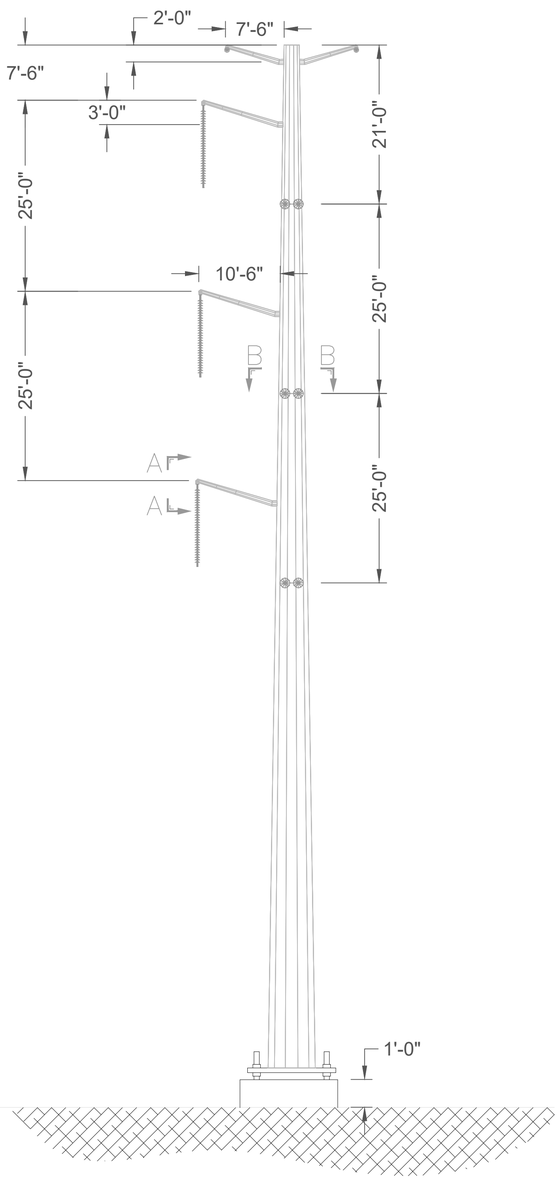

FRONT ELEVATION

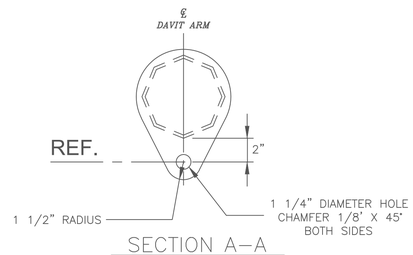

SECTION A–A

CONDUCTOR/SHIELDWIRE ATTACHMENT PLATES
(TYPICAL 4 LOCATIONS)

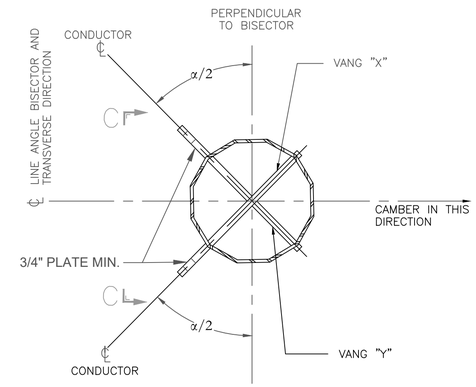

SECTION B–B

(TYPICAL 3 LOCATIONS)

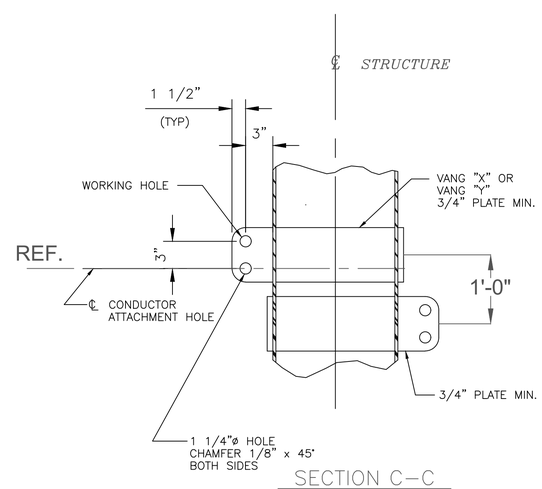

SECTION C–C

(TYPICAL 3 LOCATIONS)

PRELIMINARY
NOT FOR CONSTRUCTION

TRC
249 Western Avenue
Augusta, ME 04330

PE STAMP:

STATE OF NEW YORK
KEVIN G. MARTIN
No. 099090
LICENSED PROFESSIONAL ENGINEER

KEY PLAN:

REVISIONS:

NO.	DATE	DESCRIPTION
1	10/23/2023	ISSUED FOR 94-C PERMIT
2		
-	-	-
-	-	-
-	-	-
-	-	-
-	-	-
-	-	-

PROJECT TITLE:

MILL POINT SOLAR I PROJECT

PROJECT LOCATION:

TOWN OF GLEN
MONTGOMERY CO., NY

SHEET TITLE & DESCRIPTION:

V1.ST.D1.MOD
VERTICAL STEEL POLE
DEAD-END

-

PROJ NUM:	XXXXXX
DES:	B. HACKLEY
DWN:	B. HACKLEY
CHK:	K. DRZEWIECKI
APV:	A. JAEGER
DATE:	10/23/2023

SCALE AT 22" x 34":

NTS

SHEET NO: MPS-T-103-03
REV: 1

AES Tilehurst 22KXA v210319
PLOTTED: 11/7/2023 5:26 PM
C:\pwworking\eng\par\1541\60688\MPS-T-103-03.dwg
CSDS15